WATER INFRASTRUCTURE FINANCE AUTHORITY OF ARIZONA

THURSDAY, JUNE 8, 2023
Water Conservation Grant Fund Committee Meeting 1:30 PM

100 N. 7th Avenue
Phoenix, Arizona 85007
Suite 100 – Camelback Conference Room

Public Zoom Meeting:
Committee Members please join using the Panelist Invitation Link

Join on your computer or mobile:
https://azcommerce.zoom.us/j/93287353866
Meeting ID: 932 8735 3866

Join By Phone:
Call in Number: (253) 205-0468
Meeting ID: 932 8735 3866

FINAL AGENDA

Call Meeting to Order

1. Kim Schonek, Chairperson, will call the Water Conservation Grant Fund Committee Meeting to order with a call for quorum.

Update. Discussion or Presentation

2. ***Review & Discuss:*** Water Conversation Grant Fund Application List – *Chuck Podolak and Lindsey Jones will lead the discussion*

Regular Agenda

3. ***Review, Discuss & Possible Action***: Recommend Approval of Grant Application WC1-001-2023 – Alpine Domestic Water Improvement District – WCGF – $250,000– *Lindsey Jones will lead the discussion*

4. ***Review, Discuss & Possible Action:*** Recommend Approval of Grant Application WC1-016-2023 – Town of Gilbert – WCGF – $3,000,000 – *Lindsey Jones will lead the discussion*

5. ***Review, Discuss & Possible Action:*** Recommend Approval of Grant Application WC1-018-2023 – City of Glendale – WCGF – $3,000,000 – *Lindsey Jones will lead the discussion*

6. ***Review, Discuss & Possible Action:*** Recommend Approval of Grant Application WC1-019-2023 – City of Goodyear – WCGF – $74,000– *Lindsey Jones will lead the discussion*

7. ***Review, Discuss & Possible Action:*** Recommend Approval of Grant Application WC1-037-2023 – City of Phoenix – WCGF – $3,000,000 – *Lindsey Jones will lead the discussion*

8. ***Review, Discuss & Possible Action:*** Recommend Approval of Grant Application WC1-039-2023 – Pima County – WCGF – $2,054,017 – *Lindsey Jones will lead the discussion*

9. ***Review, Discuss & Possible Action:*** Recommend Approval of Grant Application WC1-040-2023 – City of Prescott– WCGF – $3,000,000 – *Lindsey Jones will lead the discussion*

10. ***Review, Discuss & Possible Action:*** Recommend Approval of Grant Application WC1-045-2023 – San Carlos Irrigation and Drainage District – WCGF – $555,658.40 – *Lindsey Jones will lead the discussion*

11. ***Review, Discuss & Possible Action:*** Recommend Approval of Grant Application WC1-053-2023 – City of Tucson – WCGF – $3,000,000 – *Lindsey Jones will lead the discussion*

12. ***Review, Discuss & Possible Action:*** Recommend Approval of Grant Application WC1-058-2023 – Verde Natural Resource Conservation District – WCGF – $2,998,732 – *Lindsey Jones will lead the discussion*

13. ***Review, Discuss & Possible Action:*** Recommend Approval of Grant Application WC1-060-2023 – Williams Unified School District #2 – WCGF – $2,158,500 – *Lindsey Jones will lead the discussion*

14. ***Review, Discuss & Possible Action:*** Recommend Approval of Grant Application WC1-061-2023 – City of Yuma – WCGF – $3,000,000 – *Lindsey Jones will lead the discussion*

15. ***Review, Discuss & Possible Action:*** Elect a Chairperson – *Chuck Podolak will lead the discussion*

Call to the Public

16. ***Call to the Public:*** This is the time for the public to comment. Members of the Committee may not discuss items that are not specifically identified on the agenda. Pursuant to A.R.S. § 38-431.01(H), action taken as a result of public comment will be limited to directing staff to study the matter, responding to any criticism or scheduling the matter for further consideration and decision at a later date. Members of the public wishing to address the committee must fill out and submit a request on the provided form that is available at sign in for the meeting. Comments will be limited to three minutes.

    Members of the public attending virtually that wish to comment may do so by completing the public comment card available by following the link below:

    Request to Address the Committee: https://forms.gle/AEgbKNpp88DEpR3k7

Please note that public comments on individual Water Conservation Grant Fund proposals must be submitted via email to be considered as a part of the Committee's recommendations. Comments on grant proposals should be emailed to contact@azwifa.gov by 5:00 pm on June 7, 2023.

Meeting Conclusion & Adjournment of Public Meeting

17. ***New Business/Issues:***
    - Next Water Conservation Grant Fund Committee Meeting Date: July 19, 2023, in Phoenix, Arizona – Kim Schonek will lead the discussion

18. ***Adjournment***

Notes on Proceedings

WIFA is committed to complying with the Americans with Disabilities Act. Persons with a disability may request reasonable accommodation, such as a sign language interpreter, by contacting WIFA at (602) 364-1310. Requests should be made as early as possible to allow time to arrange the accommodation.

Background material provided to the Committee that is not otherwise exempt by law from public inspection is available for inspection on WIFA's website at https://www.azwifa.gov/news/public-meetings.

The Committee may vote to go into executive session, which will not be open to the public, for any item listed on the agenda, for any purpose as authorized under A.R.S. § 38-431.03. The executive session is not open to the public and all legal action will take place in a meeting that is open to the public.

At its discretion, the Committee may consider and act upon any agenda item out of order. One or more members may participate via teleconference. The agenda for the meeting is subject to change up to 24 hours before the meeting. **All matters on the agenda may be discussed, considered and subject to action by the Committee. The Committee reserves the right to table any item on the agenda.**

Tab 1

AGENDA ITEM:

Kim Schonek, Chairperson, will call the Water Conservation Grant Fund Committee Meeting to order with a call for quorum.

ACTION REQUIRED:

Roll call for Quorum

PREVIOUS ACTION:

None

STAFF CONTACT:

Yolanda Mendoza

ATTACHMENTS:

None

STAFF COMMENTS

None

Tab 2

AGENDA ITEM:
Water Conversation Grant Fund List

ACTION REQUIRED:
Review, Discuss & Recommend Approval

PREVIOUS ACTION:
None

STAFF CONTACT:
Lindsey Jones

RECOMMENDED DISCUSSION TIME:
5 Minutes

ATTACHMENTS:
- List of Water Conservation Grant Fund Applicants – First Round

STAFF COMMENTS:
None

Water Conservation Grant Fund
Round One Applications

Applicant	Program/Project Title	Type of Conservation Activity	Category	County	Amount Requested
Alpine Domestic Water Improvement District	Water Meter Upgrade	Projects facilitating coordinated water management, including groundwater storage and recovery.	Advanced Meters	Apache	$250,000.00
Apache Junction Water District	Advanced Metering Infrastructure Program	Programs and projects that reduce water use Per A.R.S. 49-1332(B)(2)	Advanced Meters	Pinal	$1,065,845.00
Bonneville Environmental Foundation	Cooling Water Conservation Program	Programs and projects that reduce water use Per A.R.S. 49-1332(B)(2)	Efficient Fixtures/System Upgrades	Maricopa	$2,990,709.35
Buckeye Water Conservation and Drainage District	BWCDD Irrigation District Modernization and Water Storage Program: Phase I Diversion Intake Structure	Programs and projects that reduce water use Per A.R.S. 49-1332(B)(2)	Agriculture System Upgrades	Maricopa	$3,000,000.00
Buckskin Sanitary District	Injection Wells Installation	Projects facilitating coordinated water management, including groundwater storage and recovery.	Recharge	La Paz	$250,000.00
Campe Verde Town of	Water & Wastewater Conservation and Reuse Program - Phase 2a	Programs or projects to promote groundwater recharge and improved aquifer health.	Efficient Fixtures/System Upgrades	Yavapai	$3,000,000.00
Chandler City of	Water Efficient Technology Rebate Program (Commercial, Industrial, HOA, Multi-family)	Programs and projects that reduce water use Per A.R.S. 49-1332(B)(2)	Efficient Fixtures/System Upgrades	Maricopa	$1,500,000.00
Chandler City of	Non-Functional Grass Removal Program (Public Property)	Programs and projects that reduce water use Per A.R.S. 49-1332(B)(2)	Turf Removal	Maricopa	$3,000,000.00
Chandler City of	Grass Removal Rebate Program (Multi-family, HOA and Commercial Property)	Programs and projects that reduce water use Per A.R.S. 49-1332(B)(2)	Turf Removal	Maricopa	$975,000.00
Clarkdale Town of	Clarkdale Cellular Water Meter Upgrades Program	Programs or projects to improve groundwater conservation and surface water flows.	Advanced Meters	Yavapai	$562,500.00

Applicant	Program/Project Title	Type of Conservation Activity	Category	County	Amount Requested
Creighton Elementary School Dist.	Kennedy Elementary School Water Conservation program	Education and research programs on how to reduce water consumption, increase water efficiency or increase water reuse.	Education/ Research/Studies	Maricopa	$3,000,000.00
Ecoculture	Lower Salt River Restoration Program	Landscape watershed protection, restoration, rehabilitation to augment water supplies Per A.R.S. 49-1332(B)(5)	Vegetation Managment	Maricopa	$1,247,933.35
El Mirage City of	Water Production Facility Conservation Project	Programs or projects to promote groundwater recharge and improved aquifer health.	Recharge	Maricopa	$250,000.00
Friends of the Verde River	River Friendly Living - Camp Verde	Programs and projects that reduce water use Per A.R.S. 49-1332(B)(2)	Education/ Research/Studies	Yavapai	$250,000.00
Gary Woodard – Water Resources Consulting	Enhanced Water Efficiency Audits for Government Facilities	Education and research programs on how to reduce water consumption, increase water efficiency or increase water reuse.	Education/ Research/Studies	Maricopa	$340,000.00
Gilbert Town of	Municipal Grass Removal Program	Programs and projects that reduce water use Per A.R.S. 49-1332(B)(2)	Turf Removal	Maricopa	$3,000,000.00
Glendale City of	Glendale Water Wise Rebate Program for Residential and Non-Residential Customers	Programs and projects that reduce water use Per A.R.S. 49-1332(B)(2)	Turf Removal	Maricopa	$450,000.00
Glendale City of	City of Glendale Right Of Way Xeriscape Landscape Program	Programs and projects that reduce water use Per A.R.S. 49-1332(B)(2)	Turf Removal	Maricopa	$3,000,000.00
Goodyear City of	Commercial, Institutional, Industrial, and HOA Lawn Removal Incentive	Programs and projects that reduce water use Per A.R.S. 49-1332(B)(2)	Turf Removal	Maricopa	$74,000.00
Higley Unified School District	Artificial Turf	Programs and projects that reduce water use Per A.R.S. 49-1332(B)(2)	Turf Removal	Maricopa	$3,000,000.00
Marana Town of	Pilot Project to expand Water Conservation Program for Marana Water Department	Programs and projects that reduce water use Per A.R.S. 49-1332(B)(2)	Education/ Research/Studies	Pima	$250,000.00

Applicant	Program/Project Title	Type of Conservation Activity	Category	County	Amount Requested
Marana Town of	Santa Cruz River Effluent Recharge Program	Programs or projects to promote groundwater recharge and improved aquifer health.	Recharge	Pima	$3,000,000.00
Maricopa Consolidated Domestic Water Improvement District	Automated Meter Reading Installation Project	Programs and projects that reduce water use Per A.R.S. 49-1332(B)(2)	Advanced Meters	Pinal	$128,466.00
Maricopa Water District	Beardsley Canal Flume and Control Gates Improvements Project	Programs and projects that reduce water use Per A.R.S. 49-1332(B)(2)	Agriculture System Upgrades	Maricopa	$250,000.00
Metropolitan Domestic Water Improvement District	Metro Main Advanced Metering Infrastructure (AMI) Implementation and WaterSmart Customer Platform	Education and research programs on how to reduce water consumption, increase water efficiency or increase water reuse.	Advanced Meters	Pima	$3,000,000.00
Mohave CO Flood Control District	Hualapia Aquifer Infilltration Basins	Programs or projects to promote groundwater recharge and improved aquifer health.	Recharge	Mohave	$3,000,000.00
New Magma Irrigation District	Upgraded Flow Control Gates and Turnout Valves Project	Programs and projects that reduce water use Per A.R.S. 49-1332(B)(2)	Agriculture System Upgrades	Pinal	$250,000.00
Paloma Irrigation and Drainage District	PIDD System Modernization Program - Phase III: Lateral D Modernization for Total Channel Control	Programs and projects that reduce water use Per A.R.S. 49-1332(B)(2)	Agriculture System Upgrades	Maricopa	$2,071,497.00
Papago Butte Domestic Water Improvement District	AMR/AMI Water Meter Installation Project	Programs and projects that reduce water use Per A.R.S. 49-1332(B)(2)	Advanced Meters	Pinal	$62,004.00
Peoria City of	Remote Sensing Analysis to Assist Water Conservation Effort	Education and research programs on how to reduce water consumption, increase water efficiency or increase water reuse.	Education/ Research/Studies	Maricopa	$250,000.00
Peoria City of	AMI Implementation Study & Pilot Program	Programs and projects that reduce water use Per A.R.S. 49-1332(B)(2)	Education/ Research/Studies	Maricopa	$3,000,000.00

Applicant	Program/Project Title	Type of Conservation Activity	Category	County	Amount Requested
Peoria City of	Peoria Water Reservoir Conservation Program	Programs and projects that reduce water use Per A.R.S. 49-1332(B)(2)	Efficient Fixtures/System Upgrades	Maricopa	$2,332,500.00
Peoria City of	City of Peoria Parks and Recreation Water Conservation Program	Programs and projects that reduce water use Per A.R.S. 49-1332(B)(2)	Turf Removal	Maricopa	$2,523,750.00
Peoria City of	Sunrise Mountain High School Multi-Purpose Field Turf Reduction Project	Programs and projects that reduce water use Per A.R.S. 49-1332(B)(2)	Turf Removal	Maricopa	$250,000.00
Phoenix City of	Multifamily Water Efficiency Checkups - WERF	Education and research programs on how to reduce water consumption, increase water efficiency or increase water reuse.	Education/ Research/Studies	Maricopa	$3,000,000.00
Phoenix City of	Phoenix Water Conservation Corps	Programs and projects that reduce water use Per A.R.S. 49-1332(B)(2)	Education/ Research/Studies	Maricopa	$3,000,000.00
Phoenix City of	High Efficiency Toilet Replacement and Smart Irrigation Controller Rebate	Programs and projects that reduce water use Per A.R.S. 49-1332(B)(2)	Efficient Fixtures/System Upgrades	Maricopa	$105,000.00
Phoenix City of	Commercial and Residential Turf Conversion Rebates	Programs and projects that reduce water use Per A.R.S. 49-1332(B)(2)	Turf Removal	Maricopa	$3,000,000.00
Pima County	Pima County Arthur Pack Park Water Conversion Project	Programs or projects to improve groundwater conservation and surface water flows.	Reclamation	Pima	$250,000.00
Pima County Facilities Management	Pima County Water Conservation Initiative: Efficient Fixture Replacement Program	Programs or projects to reduce structural water overuse issues.	Efficient Fixtures/System Upgrades	Pima	$2,054,017.00
Prescott City of	Water Meter Replacement Program	Programs and projects that reduce water use Per A.R.S. 49-1332(B)(2)	Advanced Meters	Yavapai	$3,000,000.00
Roosevelt Irrigation District	Conservation through Automation Program (CTAP)	Programs or projects to improve groundwater conservation and surface water flows.	Agriculture System Upgrades	Maricopa	$1,906,280.85

Applicant	Program/Project Title	Type of Conservation Activity	Category	County	Amount Requested
Saint David Irrigation District	Canal Efficiency Construction, Phase 1	Programs or projects to improve groundwater conservation and surface water flows.	Agriculture System Upgrades	Cochise	$3,000,000.00
Saint David Irrigation District	Canal Efficiency Feasibility	Programs or projects to improve groundwater conservation and surface water flows.	Education/ Research/Studies	Cochise	$3,000,000.00
Salt River Project Agricultural Improvement and Power District	Beaver Creek Watershed and Wildlife Habitat Enhancement Project, Phase 1 & 2	Landscape watershed protection, restoration, rehabilitation to augment water supplies Per A.R.S. 49-1332(B)(5)	Vegetation Managment	Yavapai	$250,000.00
San Carlos Irrigation and Drainage District	SCIDD Phased System Improvements Program: Little Mountain Spill Water Conservatory Project	Programs and projects that reduce water use Per A.R.S. 49-1332(B)(2)	Agriculture System Upgrades	Pinal	$555,658.40
Scottsdale City of	Expansion of residential grass removal landscape conversion REBATE activity	Programs and projects that reduce water use Per A.R.S. 49-1332(B)(2)	Turf Removal	Maricopa	$250,000.00
Sierra Vista City of	(Re)charging Ahead: A Program to Implement the Cochise Conservation and Recharge Network	Programs or projects to promote groundwater recharge and improved aquifer health.	Education/ Research/Studies	Cochise	$1,460,000.00
Snowflake Town of	System wide water meter replacement program with new meters and AMI radio read modules.	Programs or projects to improve groundwater conservation and surface water flows.	Advanced Meters	Navajo	$732,418.50
Snowflake Town of	Replace 3,500-ft of leaking 2" galvanized waterline with new 6" PVC waterline.	Programs or projects to improve groundwater conservation and surface water flows.	Efficient Fixtures/System Upgrades	Navajo	$600,450.00
Springerville Town of	Springerville AMR Meters	Programs and projects that reduce water use Per A.R.S. 49-1332(B)(2)	Advanced Meters	Apache	$524,025.00
Surprise City of	Enhanced Water Conservation Rebate Program	Programs and projects that reduce water use Per A.R.S. 49-1332(B)(2)	Turf Removal	Maricopa	$159,100.00

Applicant	Program/Project Title	Type of Conservation Activity	Category	County	Amount Requested
Tempe City of	Nonfunctional Turf Removal at City Parks	Programs and projects that reduce water use Per A.R.S. 49-1332(B)(2)	Turf Removal	Maricopa	$80,244.54
Tempe City of	Nonfunctional Turf Removal at Arizona State University	Programs and projects that reduce water use Per A.R.S. 49-1332(B)(2)	Turf Removal	Maricopa	$3,000,000.00
Tucson City of	Automated Metring Infrastructure (AMI) Program Phase 1	Programs and projects that reduce water use Per A.R.S. 49-1332(B)(2)	Advanced Meters	Pima	$3,000,000.00
University of Arizona, Board of Regents	Arizona County and Community Level Water Conservation Factsheets	Education and research programs on how to reduce water consumption, increase water efficiency or increase water reuse.	Education/ Research/Studies	All	$175,069.00
University of Arizona, Board of Regents	Portable low-energy technology to desalinate brackish well water and conserve Colorado river water	Education and research programs on how to reduce water consumption, increase water efficiency or increase water reuse.	Education/ Research/Studies	Pima	$249,965.00
Upper Verde River Watershed Protection Coalition, fiscal agent Town of Prescott Valley	Optimization of groundwater recharge in the Upper Verde River Watershed	Programs or projects to promote groundwater recharge and improved aquifer health.	Recharge	Yavapai	$3,190,000.00
Verde Natual Resource Conservation District	Soil Moisture Monitoring and Irrigation Optimization for Agricultural Water Users	Programs or projects to improve groundwater conservation and surface water flows.	Agriculture System Upgrades	Yavapai	$177,760.00
Verde Natural Resource Conservation District	Camp Verde Irrigation Piping Program	Programs or projects to improve groundwater conservation and surface water flows.	Agriculture System Upgrades	Yavapai	$2,998,732.00
Watershed Management Group	Private Groundwater User Water Conservation Program	Programs and projects that reduce water use Per A.R.S. 49-1332(B)(2)	Education/ Research/Studies	Pima	$2,582,093.00
Williams Unified School District #2	Williams Athletic Fields Water Conservation Program	Programs and projects that reduce water use Per A.R.S. 49-1332(B)(2)	Turf Removal	Coconino	$2,158,500.00
Yuma City of	City of Yuma Water Conservation Program	Programs or projects to improve groundwater conservation and surface water flows.	Education/ Research/Studies	Yuma	$3,000,000.00

Applicant	Program/Project Title	Type of Conservation Activity	Category	County	Amount Requested
Yuma City of	City of Yuma Irrigation Standards Modernization	Programs and projects that reduce water use Per A.R.S. 49-1332(B)(2)	Reclamation	Yuma	$3,000,000.00
Yuma County of	Yuma County Water Conservation Program	Programs and projects that reduce water use Per A.R.S. 49-1332(B)(2)	Education/ Research/Studies	Yuma	$1,500,000.00

Total	**$103,533,517.99**
# of Applications	**65**

Tab 3

AGENDA ITEM:

Recommend Approval of Grant Number WC1-001-2023 – Alpine Domestic Water Improvement District – WCGF – $250,000

ACTION REQUIRED:

Review, Discuss & Recommend Approval

PREVIOUS ACTION:

None

STAFF CONTACT:

Lindsey Jones

RECOMMENDED DISCUSSION TIME:

5 Minutes

ATTACHMENTS:

- Grant Number WC1-001-2023 – Alpine Domestic Water Improvement District
- Water Conservation Grant Fund Evaluation

STAFF COMMENTS:

None

water meter upgrade

Profile : shawnadwid@frontier.com

Entity Name: : Alpine Domestic Water Improvement District

I. General Information

1. Title of Project: : water meter upgrade

2.Type of Conservation Activity (A.R.S. § 49-1332(B)): : Projects facilitating coordinated water management, including groundwater storage and recovery.

Note: for the purpose of the application, the term project and program will be referred to as “conservation activity”

3. Is this for an individual Water Conservation Project or a general Water Conservation Program? : Water Conservation Project

4. What is the location of conservation activity?

City: : Alpine

County: : Apache

Program/Project Congressional District (check all that apply) :

2

Program/Project Legislative District (check all that apply) :

6

Watershed : Upper Gila

Active Management Area (if applicable): :

Irrigation Non-Expansion area (if applicable): :

5.Conservation Activity Cost

Amount requested from the WCGF for this activity: : $250,000.00

Amount of matching funds: : $62,500.00

Total conservation activity cost: : $312,500.00

When applying for the grant, note that a single water conservation program grant may not exceed $3,000,000. A single water conservation project grant may not exceed $250,000. The WCGF requires at least a twenty-five percent match for each water conservation program or project.

6. What is the estimated water savings in acre-feet per year? : 4

Explain calculation: : 3 home water line breaks that totaled over 1 million gallons. There were more water line breaks that were not as large. 1 million gallons is 3+ acre feet.

7. What is the expected duration of the conservation activity? : We think we can get the meters installed within two years. After that the conservation activity will be on-going.

II. Conservation Activity Benefits and Results

8. What is the water conservation activity you propose to fund with grant monies? Describe in detail. : We want to replace our direct-read meters with radio read meters. This will allow us to "track" water usage through meters and identify home leaks quickly to greatly reduce water losses. In the winter of 2022/2023, we had numerous water line breaks in property owners homes that we could not identify due to not being able to read the meters because of the snow pack. Just 3 meters lost 1,000,000 gals of water and there were more broken water lines.

9. What is the source of the water that will be conserved? If it is mainstem Colorado River water or Colorado River water delivered through the Central Arizona Project, please clearly indicate so. : Ground water in the Alpine valley.

10. Describe the community (population size, demographics, principal economic activities, etc.) impacted by the conserved water. : Alpine is a small community of about 200 households in the winter that swells to about 600 households in the spring, summer and fall. Tourism is the principal economic source. Most of the summer residents have homes that are shut down every winter. Our well levels have dropped in the last few years so we want to be conservative in our water usage.

11. What is the extent to which your water conservation activity achieves one or more of the following (select all that apply): :

value1

value2

Describe: : We will be able to identify leaks so that water losses will be minimized. The more water we don't lose due to leaks, the more water there will be for future use. Home owners can also be made aware of extra water usage and we can help them find leaks.

12. What is the extent to which your water conservation activity addresses one of more of the following: :

Water supply shortages

Groundwater depletion

Describe: : We can stop some useless water waste. We can reduce draws from our wells.

13. How will your water conservation activity align with a local, regional, or statewide water plan or integrated resource management plan? : Unknown

14. What are the costs and benefits of your water conservation activity, including any environmental impacts? : The costs are going to be in replacing the water meters. The benefits will be in our ground water supply not being depleted.

15. How will you measure the effectiveness of the conservation activity? : We already keep an eye on our well levels. We will continue to monitor them.

III. Funding Sources

16. If your water conservation activity is eligible for funding from WIFA's Long-Term Water Augmentation Fund or Water Supply Development Fund, does the nature of your conservation activity make funding from those funds impractical, and why? : We are hoping to qualify for a grant - not a loan.

17. Would the conservation activity be otherwise implemented without this grant funding? Explain. : Eventually our DWID will be able to afford to replace all our meters. We think that might take about 10 years.

18. To what extent will your water conservation activity maximize or leverage multiple available funding sources, including federal funding? : We are only asking to be considered for this Grant.

19. Are there cost-sharing opportunities with other applicants or other parties? Explain. : Not really. Our water system is separate from the smaller systems in the Alpine Valley. As of now, they want to remain separate from Alpine DWID.

20. What is the source and amount of the match (including in-kind match)? : Alpine DWID funds through our monthly billing. We can match the 25% over the course of two years. Both in dollars and in-kind. We will use our crew to install the meters and there will be administrative costs as in-kind.

IV. Capacity, Feasibility, & Public Comment

21. What qualifications and capacity do you have for completing your proposed water conservation activity? Include any past managerial deficiencies and provide the name(s) and qualifications of the individual(s) or entities who will be managing this activity. : Shawna Metzger - General Manager. Shawna managed the financial end of the San Francisco River Waterline Repair Project in 2016 as the District Clerk. We used WIFA grant funds for the preliminary engineering and NEPA study. We used USDA-RD funds for the construction with a 15% match of in-kind. David Goude - Operations Foreman. David has been with ADWID since 2015. Turner Harper - Operator. Turner has been with ADWID since 2018. David and Turner will be the crew to install the meters. Ronda Dorsey - District Clerk. Ronda will work closely with Shawna

22. Will there be significant management impacts as the result of the proposed conservation activity, or any technology associated with the conservation activity? (For example: additional costs or staffing requirements) : We believe that our operating costs might decrease. We will have to buy the laptop and the software to read the meters, but once we have those items our costs should decrease as we won't need to use as much manpower to get the meter reads and enter them into our utility billing program.

23. Will the proposed conservation activity promote collaborative partnerships to address water-related issues? Explain. : No. Our water system is separate from the smaller systems in the Alpine Valley. As of now, they want to remain separate from Alpine DWID.

24. What is the stakeholder involvement in the conservation activity planning process? : Our stakeholders won't actually be involved. We will send out a letter explaining what we are planning to do.

25. Will the proposed conservation activity include public outreach and opportunities for the public to learn about the conservation activity? Explain. : We plan to also explain in our letter about water conservation and how our stakeholders can reduce their water usage.

26. Is there community and/or sector support for the conservation activity? Explain. : We don't know. We hope so. Anything that will allow us to more closely monitor our water usage should garner community support.

27. How feasible is it to complete your water conservation activity? Explain. : Very feasible. With this grant it will be done sooner rather than much later.

28. If the conservation activity is a continuation of ongoing activities, has the activity been shown to be effective? If a new activity, has the proposed project, technology, or technique previously been implemented? : This would be new technology. These meters are commonly used in many communities.

29. Will the proposed conservation activity implement an established Best Management Practice? Explain. : Our goal is to always know how much water our community needs and how best to conserve and consume. As it is now, we have no idea until we read the meters once a month if anyone has a major leak or even a minor leak. We have no established Best Management Practice in place.

Additional Supporting Documentation (pdf, jpg, word, excel) : 4 - WCGF Budget Template.xlsx

Additional Supporting Documentation (pdf, jpg, word, excel) :

Additional Supporting Documentation (pdf, jpg, word, excel) :

Additional Supporting Documentation (pdf, jpg, word, excel) :

Additional Supporting Documentation (pdf, jpg, word, excel) :

Average Score :

# of Reviews : 0

# of Denials : 0

Please use the following link to view the Budget

Budget Worksheet :

View Budget Worksheet : https://portal.ecivis.com/#/peerBudget/E154D7CE-3518-4C37-BC1B-BC4EBC75ADF3

Application Goals :

View Application Goals : https://portal.ecivis.com/#/peerGoals/24902604-8463-48AB-A0FB-9DD0CE00A284

Created by : zengine+36768@srm.ecivis.com

Record ID # : 50766192

Last change : 2023-05-19T21:32:53+0000

Budget Table

Grant Award Budget For:

FY 2023 Water Conservation Grant Fund (WCGF)

WATER INFRASTRUCTURE FINANCE AUTHORITY OF ARIZONA

Project Name:

Budget Items

Category	Title	Units	Unit Cost	Extended Cost	Direct Cost	Indirect Cost	Cost Share
Personnel							
	Personnel install crew	4 - 5 hrs per meter	$222.50	$111,250.00	$0.00	$0.00	$0.00
	Personnel General Manager	80 hours on project	$29.00	$2,320.00	$0.00	$0.00	$0.00
	Personnel District Clerk	1 hour per meter	$20.00	$10,000.00	$0.00	$0.00	$0.00
Personnel Total		**0**	**$271.50**	**$123,570.00**	**$0.00**	**$0.00**	**$104,410.00**
Fringe Benefits							
	Fringe Benefits	0	$0.00	$0.00	$0.00	$0.00	$0.00
Fringe Benefits Total		**0**	**$0.00**	**$0.00**	**$0.00**	**$0.00**	**$0.00**
Travel							
	Travel	0	$0.00	$0.00	$0.00	$0.00	$0.00
Travel Total		**0**	**$0.00**	**$0.00**	**$0.00**	**$0.00**	**$0.00**
Equipment							
	Equipment	0	$0.00	$0.00	$0.00	$0.00	$0.00
	Equipment backhoe	4-5 hours per meter	$0.00	$0.00	$0.00	$0.00	$0.00
Equipment Total		**0**	**$0.00**	**$0.00**	**$0.00**	**$0.00**	**$0.00**
Supplies							
	Supplies - meters	500	$283.50	$141,750.00	$0.00	$0.00	$0.00
	Supplies - risers	400	$178.18	$89,090.00	$0.00	$0.00	$0.00
Supplies Total		**0**	**$0.00**	**$230,840.00**	**$0.00**	**$0.00**	**$0.00**
Contractual							
	Contractual	0	$0.00	$0.00	$0.00	$0.00	$0.00

Budget Table

Contractual Total		**0**	**$0.00**	**$0.00**	**$0.00**	**$0.00**	**$0.00**
Construction							
	Construction	0	$0.00	$0.00	$0.00	$0.00	$0.00
Construction Total		**0**	**$0.00**	**$0.00**	**$0.00**	**$0.00**	**$0.00**
Indirect Costs							
	Indirect Cost	0	$0.00	$0.00	$0.00	$0.00	$0.00
Indirect Costs Total		**0**	**$0.00**	**$0.00**	**$0.00**	**$0.00**	**$0.00**
Other							
	Other	0	$0.00	$0.00	$0.00	$0.00	$0.00
Other Total		**0**	**$0.00**	**$0.00**	**$0.00**	**$0.00**	**$0.00**

Water Conservation Grant Fund Application Evaluation
Round 1

Alpine Domestic Water Improvement District - Water Meter Upgrade	**WC1-001-2023**
Grant Amount	$250,000.00
Summary	Alpine DWID plans to replace direct-read meters with radio read meters which will allow them to track water usage through meters and identify home leaks quickly to greatly reduce water losses. Applicant noted in the winter of 2022/2023, they had numerous water line breaks in property owners' homes that could not be identified due to not being able to read the meters because of the snowpack. Just 3 meters lost 1,000,000 gals of water and there were more broken water lines.
Location	City of Alpine, Apache County
Estimated water savings in acre-feet per year	4
Duration of project/program	Two years for implementation Applicant expects conservation benefits to continue well into the future.

Conservation Activity Benefits and Results

Statutory Evaluation Criteria #1, #2, and #4

Conservation activity	Projects facilitating coordinated water management, including groundwater storage and recovery.
Source of water	Groundwater in the Alpine valley.
Community information	Alpine is a small community of about 200 households in the winter that swells to about 600 households in the spring, summer, and fall. Tourism is the principal economic source. Most of the summer residents have homes that are shut down every winter. Applicant noted well levels have dropped in the last few years, so they want to be conservative in water usage.
Costs and benefits of project/program	The applicant stated the cost is replacing the water meters and the benefits will be ground water supply conservation.

Funding Sources

Statutory Evaluation Criteria #3 and #5

Eligibility for LTWAF or WSDF	Alpine DWID stated they are hoping to qualify for a grant - not a loan. No other justification was provided for why the LTWAF or WSDF would be impractical options for funding this project. WIFA staff finds that they would meet WSDF eligibility. It is unclear whether this type of conservation program would be feasible with a repayment obligation under the WSDF or LTWAF.

Water Conservation Grant Fund Application Evaluation
Round 1

Leverage of multiple funds	Applicant indicated they did not plan to leverage other funding sources
Source of funding and match	$62,500 will be provided in match, both in cash and in-kind match Alpine DWID noted they could meet the 25% match requirement with cash over the course of 2 years funds through their monthly billing, as well as in-kind, they plan to use their staff to install the meters and noted there will be administrative costs and in-kind.

Capacity, Feasibility, & Public Comment
Statutory Evaluation Criteria #6, #7, and #8

Qualifications and capacity of applicant	Applicant listed the following qualifications: -**Shawna Metzger** - General Manager. Shawna managed the financial end of the San Francisco River Waterline Repair Project in 2016 as the District Clerk. Has previously managed WIFA grant funds for a preliminary engineering and NEPA study, and USDA-RD funds for a construction project which required a 15% match of in-kind. -**David Goude** - Operations Foreman. David has been with ADWID since 2015. Will install the meters -**Turner Harper** - Operator. Turner has been with ADWID since 2018. Will install the meters -**Ronda Dorsey** - District Clerk. Ronda will work closely with Shawna.
Feasibility of project/program	The applicant stated this project is very feasible and with this grant it would be done sooner rather than much later. Applicants believe operating costs might decrease after initial purchase of laptop and software to read the meters.
Public comments	No stakeholder involvement is planned but they noted they planned to send out a letter explaining what they are planning to do and explain about water conservation and how stakeholders can reduce water usage.

Water Conservation Grant Fund Application Evaluation
Round 1

Technical Review:

The Applicants has a **current SAM.GOV UEI #** which allows them to apply for federal funds.

The applicant has completed all steps in the grant application process and is requesting funding for a project / program that is acceptable under the regulations. The AMI water meter system will help to improve water system management, account for, and thereby reduce water losses and is very good technology for water conservation and finding leaks immediately.

Automatic AMI / AMR Metering Infrastructure:
A recent AWWA study finds that water consumption feedback informed by AMI data and facilitated by a SmartH2O digital platform is associated with substantial water savings of about 8% in the long term. Normal studies show anywhere from 2 to 10% water savings with AMI/AMR water meters.

Expenditure Code 5.8 Clean Water: Water Conservation

ARPA Final Rule (31 CFR Part 35 RIN 1505–AC77) defines water infrastructure projects as "eligible projects under the Clean Water State Revolving Fund." "A project shall meet the criteria of CWSRF eligibility found in Section 603(c) of the Clean Water Act (CWA)". Specific Expenditure Codes were created to define activities available under the water infrastructure category.

The Interagency Service Agreement (ISA-ARPA-WIFA-070122-01) between the State of Arizona, Office of the Governor and WIFA required the project / program be specific to Expenditure Code 5.8 Clean Water: Water Conservation.

WIFA staff find this project / program is consistent with Expenditure Code 5.8 Clean Water: Water Conservation as determined in Section 603c of the Clean Water Act (CWA) and the ISA.

Attachments:

- Alpine Domestic Water Improvement District Application – WC1-001-2023
- Budget

Evaluation Criteria Statutory Reference:

49-1334. **<u>Evaluation criteria for water conservation programs and projects from the water conservation grant fund; procedures</u>**

The authority shall determine the order and priority of water conservation programs and projects proposed to be funded in whole or in part with monies from the water conservation grant fund based on the following, as applicable:

1. The extent to which the water conservation program or project achieves one or more of the results prescribed by section 49-1332, subsection A.
2. The costs and benefits of the water conservation program or project, including environmental costs and benefits.
3. If the water conservation program or project is eligible for funding from the long-term water augmentation fund established by section 49-1302 or the water supply development revolving fund established by section 49-1271 and if the nature of the water conservation program or project makes funding from the long-term water augmentation fund or the water supply development revolving fund impractical.
4. The ability to provide multiple benefits.
5. The degree to which the water conservation program or project will maximize or leverage multiple available funding sources, including federal funding.
6. The qualifications and capacity of an applicant.
7. The feasibility of the water conservation program or project.
8. Public comments.

WCGF Committee Evaluation:

☐ Recommend Rejection of Grant Application

☐ Recommend Approval of Grant Application

☐ Recommend Approval of Grant Application with Modifications

Tab 4

AGENDA ITEM:

Recommend Approval of Grant Application WC1-016-2023 – Town of Gilbert – WCGF – $3,000,000

ACTION REQUIRED:

Review, Discuss & Recommend Approval

PREVIOUS ACTION:

None

STAFF CONTACT:

Lindsey Jones

RECOMMENDED DISCUSSION TIME:

5 Minutes

ATTACHMENTS:

- Grant Application WC1-016-2023 – Town of Gilbert
- Water Conservation Grant Fund Evaluation

STAFF COMMENTS:

None

Municipal Grass Removal Program

Profile : Jeremiah.churchill@gilbertaz.gov

Entity Name: : Town of Gilbert

I. General Information

1. Title of Project: : Municipal Grass Removal Program

2.Type of Conservation Activity (A.R.S. § 49-1332(B)): : Programs and projects that reduce water use Per A.R.S. 49-1332(B)(2)

Note: for the purpose of the application, the term project and program will be referred to as “conservation activity”

3. Is this for an individual Water Conservation Project or a general Water Conservation Program? : Water Conservation Programm

Please describe the specific components that make it a program. : The Town of Gilbert's Municipal Grass Removal Program is an ongoing program to identify and remove grass throughout the Town of Gilbert. The Town has currently identified areas at 8 parks or public facilities totaling 567,000 sq ft of grass to be removed and replaced with xeriscape and low-water-use/drought tolerant plants or artificial turf. Gilbert has been strategically removing grass form parks since 2013 and this program proposal is a continuation of that effort.

4. What is the location of conservation activity?

City: : The conservation activity is located in the Town of Gilbert which is in the Phoenix Active Management Area.

County: : Maricopa

Program/Project Congressional District (check all that apply) :

5

Program/Project Legislative District (check all that apply) :

14

Watershed : Middle Gila

Active Management Area (if applicable): : Phoenix AMA

Irrigation Non-Expansion area (if applicable): : N/A

5.Conservation Activity Cost

Amount requested from the WCGF for this activity: : $3,000,000.00

Amount of matching funds: : $750,000.00

Total conservation activity cost: : $3,750,000.00

When applying for the grant, note that a single water conservation program grant may not exceed $3,000,000. A single water conservation project grant may not exceed $250,000. The WCGF requires at least a twenty-five percent match for each water conservation program or project.

6. What is the estimated water savings in acre-feet per year? : 50

Explain calculation: : This is base on the water needs of over seeded grass compared to a desert landscape at 40% planting density at maturity and based on historical reference ET. This also takes into account acceptable industry standard uniformity for sprinklers and drip systems. Current planned grass to be removed = 567,000 sq ft; annual water use of over seeded grass = 19,783,000; Desert adapted plants at 40% density annual water use = 3,612,000; Difference is annual water savings = 16,171,000/326000 = 49.6 acre feet per year. Rounded up to 50 acre feet per year.

7. What is the expected duration of the conservation activity? : The expected duration of this conservation activity would be over the next two years. The Town of Gilbert's goal is to remove the 567,000 square feet of grass from parks and facilities already identified along with the potential for other areas managed by the Town during this period.

II. Conservation Activity Benefits and Results

8. What is the water conservation activity you propose to fund with grant monies? Describe in detail. : The water conservation activity proposed to fund with the grant monies is the Town of Gilbert's Municipal Grass Removal Program. The Town of Gilbert wants to set the example of removing mostly non-functional grass throughout the Town and replace it with xeriscape and drought-tolerant plants, along with replacing some functional areas with artificial turf, such as with Cosmo and Crossroads Park. Currently, the Town has begun this process by identifying 567,000 sq ft of grass to be removed at 8 different locations. The locations are: 1. Municipal Building 2 - front: 23,000 sq ft 2. Freestone Multiuse Path #1: 204,000 sq ft 3. Freestone Multiuse Path #2: 162,000 sq ft 4. Public Safety Building: 24,000 sq ft 5. Traffic Operations Building: 3,000 sq ft 6. Cosmo: 100,000 sq ft (engineering needed because of steep hill) 7. Cosmo Dog Park: 45,000 sq ft (replace with artificial turf) 8. Crossroads Park: 6,000 sq ft – (replace with artificial turf) 9. Future areas still unidentified (Potential to remove more) The Municipal Grass Removal Program will be executed through the Town by contracting out the removal of the grass and the installation of the xeriscape, along with the engineering needed at Cosmo Park because of the steep hill. The program will be managed by the Parks & Recreation Manger, Parks Operation Superintendent, and the Parks Field Supervisors to ensure successful completion of the program goals within the desired timeframe. In addition to the above listed areas already identified to have grass removed, Water Conservation and the Parks and Recreation Departments believe there is potential to remove more grass at other parks and facilities throughout the Town of Gilbert. This will also increase the estimated annual water savings that the Town hopes to achieve from this program.

9. What is the source of the water that will be conserved? If it is mainstem Colorado River water or Colorado River water delivered through the Central Arizona Project, please clearly indicate so. : The source of water that will be conserved varies between the different parks and facilities and the location within Gilbert, but will consist of Salt and Verde River water, Colorado River water delivered through the Central Arizona Project, and reclaimed

water. Conservation of all water supplies helps the Town be more flexible in its ability to meet demand and be resilient in times of shortage. For example, reductions in direct delivery of reclaimed water allow the Town to recharge that supply at one of our four reclaimed recharge facilities.

10. Describe the community (population size, demographics, principal economic activities, etc.) impacted by the conserved water. : The Town of Gilbert has grown into one of the fastest growing communities and one of the largest Town in the United States. Encompassing 72.6 square miles, just southeast of Phoenix, Gilbert has transformed from an agricultural community to a thriving and economically-diverse suburban community. The population has increased from 5,700 in 1980 to currently nearly 280,000. The Town's demographics consists of a median age of 34.3 and 67% of the population is under the age of 45. In addition, "approximately 70% of Gilbert's psychographic make-up contains Up and Coming Families, Boomburbs, and Workday Drive. These groups are characterized as younger families with median ages in the low to mid 30s focused on planting roots in suburban areas near larger cities. They are also well-educated with 70% receiving some college education, and over 50% obtaining a college degree" (http://www.gilbertedi.com/demographics/). Gilbert's principal economic activities focus in "the Science, Technology, Engineering and Math industries. Gilbert is home to many companies with emphases in Advanced Manufacturing, Aerospace and Defense, Bio-Technology, Clean Technology and Renewable Energy" (http://www.gilbertedi.com/demographics/).

11. What is the extent to which your water conservation activity achieves one or more of the following (select all that apply): :

value1

value2

value3

Describe: : Long-term reductions in water use - The extent to which the Municipal Grass Removal Program will achieve long-term reductions in water use is significant and based on the calculation used in question #6. Currently, the Town of Gilbert has identified 567,000 sq ft of grass to be removed with the potential to save 16,171,000 gallons per year (49.6 acre-ft per year). This is a permanent reduction in water use for our parks and facilities. The Town of Gilbert also believes there are more areas within the parks and facilities managed to remove more grass and increase annual water savings. Improvements in water use efficiency – the Municipal Grass Removal Program improves water use efficiency by reducing watering of non-functional grass which is an inefficient use of this resource. Improvements in water reliability – the Municipal Grass Removal Program provides an improvement in water reliability by reducing demand, which provides the Town more flexibility with its supplies. As mentioned previously, reductions in direct delivery of reclaimed water allow the Town to recharge this supply for future use and to help offset needed groundwater pumping. In addition, reductions to demand of our Salt and Verde River or Colorado River supplies provide the Town more reliability in times when these supplies are shorted due to drought and reduce reliance on backup supplies (e.g. groundwater).

12. What is the extent to which your water conservation activity addresses one of more of the following: :

Water supply shortages

Describe: : The Municipal Grass Removal Program addresses water supply shortages, reliance on non-renewable water supplies, and groundwater depletion. The grass removal program addresses these conditions primarily by reducing demand. When water supply shortages occur, either demand needs to be reduced or backup supplies are needed to continue meeting existing demand. The Municipal Grass Removal Program permanently reduces demand in our system and reduces the need to rely on backup supplies due to short term or long-term reductions in supply. Based on the current

Colorado River conditions, the Town of Gilbert is preparing to rely on less of this supply being available. In the short-term, the Town will have to turn to its finite supply of groundwater to mitigate the impacts of Colorado River reductions. Although the Town has stored renewable supplies for many years and has reserves available, it is still a finite supply and without alternative supplies available to replenish the groundwater pumping this supply will be diminished. The grass removal program proposed will reduce demand and thereby lessen the reliance on non-renewable supplies and the amount of groundwater depletion due to the anticipated decreased availability of Colorado River supplies.

13. How will your water conservation activity align with a local, regional, or statewide water plan or integrated resource management plan? : The conservation activity will support the implementation of the Town of Gilbert's Water Supply Reduction Management Plan, the Phoenix AMA Fourth Management Plan, the Lower Basin Drought Contingency Plan, and the ongoing negotiations on Colorado River operations including the Supplemental Environmental Impact Statement (SEIS) and Post-2026 Colorado River operations. The Town of Gilbert has committed itself to implementing an effective response to water supply shortages and operating within these shortages. Gilbert entered Stage 1 of its local shortage plan in June of 2022. Since then, Gilbert has launched two new rebate programs and proposed an internal budget package to fund removal of grass from our parks and facilities. Gilbert's Water Supply Reduction Management Plan specifically calls the Town to lead by example for the community and removal of grass from our own parks and facilities demonstrates this leadership to the community as we continue to ask our citizens to reduce their outdoor water use. Water conservation programs are highly prioritized in Gilbert and a program funded by WIFA would help further meet the goals of our Water Supply Reduction Management Plan. The Municipal Grass Removal Program aligns with the intent of the Fourth Management Plan of the Phoenix Active Management Area (4MP). Although Gilbert is already in compliance with the 4MP through its existing conservation efforts, the grass removal program improves conservation in the municipal sector and reduces reliance on groundwater which aligns with the intent of the plan. Grass Removal programs have been listed in the ADWR Management Plans Municipal NPCCP BMP list. The Lower Basin Drought Contingency Plan and ongoing negotiations on Colorado River operations call for reduced reliance on the Colorado River. The Municipal Grass Removal Program aligns with these plans by reducing demand in Gilbert and helping us adapt to a future of less Colorado River water. In November 2022, Gilbert signed on to the Memorandum of Understanding by and among Colorado River Basin Municipal and Public Water Providers committing to additional actions to reduce demand and expand conservation programs. The proposed program for this grant aligns with these activities by reducing the quantity of non-functional grass.

14. What are the costs and benefits of your water conservation activity, including any environmental impacts? : The benefits from removing grass include cost savings from less water used, as well as less energy used from the irrigation systems running less frequently. This will also increase water security and resilience to climate change, along with reducing the need for the Town to rely on backup supplies in times of shortages. In addition, replacing grass with native landscaping will be a positive environmental impact to aid in supporting local wildlife, pollinators and the environment, while reflecting the natural landscapes around them. Furthermore, the decrease in routine maintenance, such as with the required mowing, weed whacking, etc., will play a role in reducing urban air pollution, along with less pesticides and fertilizers being used that could improve stormwater quality from potential runoff. In addition, costs associated with this program include internal staff hours committed to managing the program and ensuring the goals of the program are completed. Costs will also include the contractors hired out to complete the removal of the grass and the installation of the xeriscape or artificial turf, along with the engineering needed for specific areas already identified. The estimated costs for personnel, marketing, construction, and engineering are included in the breakdown of costs in the budget worksheet totaling $3,750,000. A 20% contingency has been included on the construction costs due to the inflationary pressures on current pricing for labor and materials. The Town of Gilbert has up to $750,000 to contribute to the cost of the program.

15. How will you measure the effectiveness of the conservation activity? : The effectiveness of the water conservation activity will be measured through pre and post data on water use. The Town of Gilbert's parks and facilities are part of our Waterfluence Water Budget program and allows for up-to-date data on water use throughout the year. We can use this data to verify how much water was used in the past with the current grass landscape and compare after the grass has been removed on how much water is now being used. This provides data on real water savings that justifies the removal of the grass and the overall effectiveness of this program.

III. Funding Sources

16. If your water conservation activity is eligible for funding from WIFA's Long-Term Water Augmentation Fund or Water Supply Development Fund, does the nature of your conservation activity make funding from those funds impractical, and why? : The Municipal Grass Removal Program will not focus on water supply development projects and does not align with WIFA's Long-Term Water Augmentation Fund or the Water Supply Development Fund. The focal point of the conservation activity will be removing grass at parks and facilities managed by the Town of Gilbert to help in reducing outdoor irrigation use and in creating long-term water savings.

17. Would the conservation activity be otherwise implemented without this grant funding? Explain. : The conservation activity would be implemented without the grant funding but would not be at the same scale if the funding is provided, nor would the Town achieve the same success within a two-year time frame. The WCGF would allow the Town of Gilbert the ability to accelerate this program to remove the full 567,000 square feet of identified grass currently managed by the Town of Gilbert along with the potential to remove more. The Town would be able to remove approximately 212,000 square feet without the grant funding through funds allocated from its own budget.

18. To what extent will your water conservation activity maximize or leverage multiple available funding sources, including federal funding? : The water conservation activity will maximize funding from internal sources which is $750,000 planned for the 25% match of this grant. No other federal funding or other sources are included at this time.

19. Are there cost-sharing opportunities with other applicants or other parties? Explain. : Currently, there are no cost-sharing opportunities with other applicants or parties because this program will focus solely on removing non-functional turf specifically for the Town of Gilbert at their parks and facilities.

20. What is the source and amount of the match (including in-kind match)? : The source of the match will include $750,000 from the Town of Gilbert to assist with the removal of grass.

IV. Capacity, Feasibility, & Public Comment

21. What qualifications and capacity do you have for completing your proposed water conservation activity? Include any past managerial deficiencies and provide the name(s) and qualifications of the individual(s) or entities who will be managing this activity. : The Town of Gilbert has the necessary qualifications and capacity for completing the proposed water conservation activity with evidence of this seen through the past success of removing grass at the Town's parks and facilities. Starting in 2013 through 2020, the Town has removed 126,600 sq ft of grass at 6 different areas through contracting out the work for engineering and construction, which is typical for the Parks and Facilities Department and is within its normal operations. The only past managerial deficiency noted from these activities was the delay in removing more grass due to the lack of funding to continue

the program at the scale and timeline desired. The individuals who will be collaborating and managing this activity are Town of Gilbert staff, which includes Kylie Sorensen, Parks & Recreation Manager, Zachary Poweziak, Park Operation Superintendent, Scott Hesser, Parks Field Supervisor, and Richard Bay, Parks Field Supervisor.

22. Will there be significant management impacts as the result of the proposed conservation activity, or any technology associated with the conservation activity? (For example: additional costs or staffing requirements) : At this time, there are no significant management impacts, or any technology associated from the proposed grass removal program. The Town of Gilbert's staff associated with this program are familiar with the expectations and requirements to successfully accomplish the goal of removing the Town's grass in the expected timeframe.

23. Will the proposed conservation activity promote collaborative partnerships to address water-related issues? Explain. : The Town of Gilbert's Municipal Grass Removal Program promotes collaborative partnerships within the Town and throughout the community. The Town of Gilbert Water Conservation, Parks, and Facilities departments have developed a strong collaborative partnership over the past decade. This partnership has already led to millions of gallons of water being saved through proper irrigation, water efficiency improvements and grass removal. This grant would further promote this partnership as Gilbert implements Stage 1 of its local Water Supply reduction management Plan with the goal of further reducing water use from our own facilities. This goal cannot be achieved by the Water Conservation Department alone and required continued collaboration amongst internal departments. In addition, this program will be an example to the community as Gilbert continues to ask residents and businesses to reduce their own use. Gilbert is also very involved in regional and statewide collaboration with organizations such as the Arizona Municipal Water Users Association (AMWUA) and the AZ Water Association where this program can be promoted as an example of inter-departmental collaboration within an organization to address water-related issues.

24. What is the stakeholder involvement in the conservation activity planning process? : The stakeholder's involvement in the planning process for the Municipal Grass Removal Program will be throughout the life cycle of the program. Each specific park or facility worked on will have the involvement of the Parks & Recreation Manager, the Park Operation Superintendent and the Parks Field Supervisors, along with any contractors and/or engineers hired by the Town to assist with the overall goal of this program. These stakeholders will play a vital role throughout the different phases of this process, from identifying the areas that need grass removed, to help in creating the budget, to completing the work and in managing the work to ensure it is completed in the desired timeframe. Currently, the Town of Gilbert has already started the planning process and has identified 8 areas managed by the Town that will benefit from grass removed. In addition, the Parks & Recreation Manager and the Park Operation Superintendent have created a preliminary budget to capture how much funds would be needed in order for the Town to remove all grass currently identified for this program. The Water Conservation Department will work closely with Parks and Recreation to verify the water savings from the program and assist in desert plant selection. Water conservation will also assist in monitoring the progress of the grass removal program to ensure we are meeting the timeline and will also help in identifying other areas that could benefit from grass removal.

25. Will the proposed conservation activity include public outreach and opportunities for the public to learn about the conservation activity? Explain. : Yes, the conservation activity will include outreach at public facilities to learn more about the benefits of removing grass and replacing with native desert landscaping with low-water-use or drought tolerant plants. Furthermore, the Town will also utilize social media to inform the public about this program and the water savings achieved from making these landscape changes. Signage will also be installed at these specific areas to highlight the Town of Gilbert's efforts on conserving water and point residents to ways they can reduce their own use through landscape changes.

26. Is there community and/or sector support for the conservation activity? Explain. : The Town of Gilbert has committed to becoming more water wise with municipal facilities and actively encourages its residents to follow suit. The community of Gilbert has adopted this water wise mindset to ensure water conservation is more attainable and effective. Examples of this support is seen from the collaboration and close working relationships between internal departments such as with Parks and Facilities who have committed to conserving water. Evidence of this is seen in our Waterfluence program and the achievement of 28 parks and facilities that received the recognition of Water Wise Gilbert for 2022. The Town of Gilbert is also in Stage 1 of the Water Supply Reduction Management Plan that supports this type of conservation activity. In addition, the Town has showed its support by the funding package to be approved by the Mayor and Council to assist with this program.

27. How feasible is it to complete your water conservation activity? Explain. : The feasibility of completing this water conservation activity is very high. Past success from removing grass within the Town of Gilbert's parks and facilities has provided the experience needed to accomplish the goal of this program. With the additional funding from this grant, the Town would be able to accelerate the timeline in removing the 567,000 sq ft of grass mentioned within the required two-year time frame. The estimated time commitment from Parks and Facilities staff is 15% over the duration of the program and this is reasonable given other time commitments. Time commitment for Water Conservation is estimated at 5% to assist in program completion.

28. If the conservation activity is a continuation of ongoing activities, has the activity been shown to be effective? If a new activity, has the proposed project, technology, or technique previously been implemented? : The Town of Gilbert's Municipal Grass Removal program is a continuation of an ongoing activity dating back to 2013. The removal of grass has been shown to be extremely effective at reducing outdoor irrigation use. Pre and post water data from the parks and facilities that have already had grass removed show significant water and cost savings and why this is a heightened priority for the Town because of the huge potential in water savings. The 6 parks or facilities that have had grass removed totaled 126,600 sq ft, with a total estimated annual water use in gallons before grass removal of 4,417,000 gallons; estimated post removal total annual water use in gallons with desert adapted plants of 807,000 gallons. The annual water savings in gallons from these past conservation activities totals 3,610,000, with a total estimated water savings since the grass has been removed of 14,300,000 gallons.

29. Will the proposed conservation activity implement an established Best Management Practice? Explain. : Yes, the proposed conservation activity will implement an established Best Management Practice because this activity will result in reduced water used for outdoor irrigation. Grass Removal programs have been listed in the ADWR Management Plans Municipal NPCCP BMP list.

Additional Supporting Documentation (pdf, jpg, word, excel) : WCGF - Budget Worksheet - Municipal Grass Removal Program - Final - 05.18.2023.xlsx

Additional Supporting Documentation (pdf, jpg, word, excel) :

Additional Supporting Documentation (pdf, jpg, word, excel) :

Additional Supporting Documentation (pdf, jpg, word, excel) :

Additional Supporting Documentation (pdf, jpg, word, excel) :

Average Score :

# of Reviews : 0

# of Denials : 0

Please use the following link to view the Budget

Budget Worksheet :

View Budget Worksheet : https://portal.ecivis.com/#/peerBudget/CA59A6F5-08CA-469D-8A0F-B2F7A2C568DF

Application Goals :

View Application Goals : https://portal.ecivis.com/#/peerGoals/4E5814AE-C5C6-40A1-A6E7-35439D1B0058

Created by : zengine+36768@srm.ecivis.com

Record ID # : 50207834

Last change : 2023-05-18T20:08:45+0000

Budget Table

Grant Award Budget For:

FY 2023 Water Conservation Grant Fund (WCGF)

WATER INFRASTRUCTURE FINANCE AUTHORITY OF ARIZONA

Program Name: Town of Gilbert - Municipal Grass Removal Program

Budget Items

Category	Title	Hours/per year	Hourly Rate	Extended Cost	Direct Cost	Indirect Cost
Personnel						
Kylie Sorensen	Parks and Recreation Manager	312	75		$46,800.00	
Zachary Poweziak	Park Operations Superintendent	312	68		$42,432.00	
Scott Hesser	Parks Field Supervisor	312	65		$40,560.00	
Richard Bay	Parks Field Supervisor	312	48		$29,952.00	
Jeremiah Churchill	Water Resources and Conservation Coordinator	104	54		$11,232.00	
Personnel Total (assumes 2 year duration)		**0**	**$0.00**	**$0.00**	**$170,976.00**	
Fringe Benefits						
	Fringe Benefits	0	$0.00	$0.00	$0.00	$0.00
Fringe Benefits Total		**0**	**$0.00**	**$0.00**	**$0.00**	**$0.00**
Travel						
	Travel	0	$0.00	$0.00	$0.00	$0.00
Travel Total		**0**	**$0.00**	**$0.00**	**$0.00**	**$0.00**
Equipment						
	Equipment	0	$0.00	$0.00	$0.00	$0.00
Equipment Total		**0**	**$0.00**	**$0.00**	**$0.00**	**$0.00**
Supplies						
Marketing	Marketing	0	$0.00	$0.00	$5,000.00	$0.00
Supplies Total		**0**	**$0.00**	**$0.00**	**$5,000.00**	**$0.00**
Contractual						

Budget Table

	Contractual	0	$0.00	$0.00	$0.00	$0.00	
Contractual Total		**0**	**$0.00**	**$0.00**	**$0.00**	**$0.00**	
Construction							
Muni II Building	Grass Removal/Xeriscape Install	23,000	$3.57		$82,110.00		
Freestone Multiuse Path #1	Grass Removal/Xeriscape Install	204,000	$3.57		$728,280.00		
Freestone Multiuse Path #2	Grass Removal/Xeriscape Install	162,000	$3.57		$578,340.00		
Public Safety Building	Grass Removal/Xeriscape Install	24,000	$3.57		$85,680.00		
Traffic Operations Building	Grass Removal/Xeriscape Install	3,000	$3.57		$10,710.00		
Cosmo 1	Grass Removal/Xeriscape Install/Engineering	100,000	$9.50		$950,000.00		
Cosmo Dog Park	Grass Removal/Xeriscape Install/Artificial Turf	45,000	$4.45		$200,250.00		
Crossroads Park	Grass Removal/Xeriscape Install/Artificial Turf	6,000	$4.45		$26,700.00		
Additional Sites yet to be determined	Grass Removal/Xeriscape Install	88,595	$3.57		$316,283.33		
Construction Total		**655,595**			**$2,978,353.33**	**$0.00**	
Indirect Costs							
	Indirect Cost	0	$0.00	$0.00	$0.00	$0.00	
Indirect Costs Total		**0**	**$0.00**	**$0.00**	**$0.00**	**$0.00**	
Other							
Contingency (20% of Construction Cost)	Other	0	$0.00	$0.00	$595,670.67	$0.00	
Other Total		**0**	**$0.00**	**$0.00**	**$595,670.67**	**$0.00**	
Grand Total		**0**	**$0.00**	**$0.00**	**$3,750,000.00**	**$0.00**	

Water Conservation Grant Fund Application Evaluation
Round 1

Town of Gilbert, Municipal Grass Removal Program	**WC1-016-2023**
Grant Amount	$3,000,000
Category	Turf Removal
Summary	Grass removal projects throughout the Town of Gilbert. The Town of Gilbert wants to set the example of removing mostly non-functional grass throughout the Town and replace it with xeriscape and drought-tolerant plants, along with replacing some functional areas with artificial turf, such as with Cosmo and Crossroads Park. Currently, the Town has begun this process by identifying 567,000 sq ft of grass to be removed at 8 different locations. The Municipal Grass Removal Program will be executed through the Town by contracting out the removal of the grass and the installation of the xeriscape. The program will be managed by the Parks & Recreation Manger, Parks Operation Superintendent, and the Parks Field. In addition to the above listed areas already identified to have grass removed, Water Conservation and the Parks and Recreation Departments believe there is potential to remove more grass at other parks and facilities throughout the Town of Gilbert. This will also increase the estimated annual water savings that the Town hopes to achieve from this program.
Location	Town of Gilbert, Maricopa County
Estimated water savings in acre-feet per year	50
Duration of project/program	Two years for implementation Applicant expects conservation benefits to continue well into the future.

Conservation Activity Benefits and Results
Statutory Evaluation Criteria #1, #2, and #4

Activity Type	Programs and projects that reduce water use Per A.R.S. 49-1332(B)(2)
Source of water	The source of water that will be conserved varies between the different parks and facilities and the location within Gilbert, but will consist of Salt and Verde River water, Colorado River water delivered through the Central Arizona Project, and reclaimed water.
Community information	Gilbert has grown into one of the fastest growing communities and one of the largest Towns in the United States. Encompassing 72.6 square miles southeast of Phoenix, Gilbert has transformed from an agricultural community to a thriving and economically diverse suburban community.

	The population has increased from 5,700 in 1980 to nearly 280,000. The Town's demographics consists of a median age of 34.3 and 67% of the population is under the age of 45. In addition, "approximately 70% of Gilbert's psychographic make-up contains Up and Coming Families, Boomburbs, and Workday Drive. These groups are characterized as younger families with median ages in the low to mid 30s focused on planting roots in suburban areas near larger cities. They are also well educated with 70% receiving some college education, and over 50% obtaining a college degree". Gilbert's principal economic activities focus in "the Science, Technology, Engineering and Math industries. Gilbert is home to many companies with emphasis in Advanced Manufacturing, Aerospace and Defense, Biotechnology, Clean Technology and Renewable Energy".
Costs and benefits of project/program	The benefits from removing grass include cost savings from less water used, as well as less energy used from the irrigation systems running less frequently. This will also increase water security and resilience to climate change, along with reducing the need for the Town to rely on backup supplies in times of shortages. In addition, replacing grass with native landscaping will be a positive environmental impact to aid in supporting local wildlife, pollinators, and the environment, while reflecting the natural landscapes around them. Furthermore, the decrease in routine maintenance, such as with the required mowing, weed whacking, etc., will play a role in reducing urban air pollution, along with less pesticides and fertilizers being used that could improve stormwater quality from potential runoff. In addition, costs associated with this program include internal staff hours committed to managing the program and ensuring the goals of the program are completed. Costs will also include the contractors hired out to complete the removal of the grass and the installation of the xeriscape or artificial turf, along with the engineering needed for specific areas already identified. The estimated costs for personnel, marketing, construction, and engineering are included in the breakdown of costs in the budget worksheet totaling $3,750,000. A 20% contingency has been included in the construction costs due to the inflationary pressures on current pricing for labor and materials.

Funding Sources
Statutory Evaluation Criteria #3 and #5

Water Conservation Grant Fund Application Evaluation
Round 1

Eligibility for LTWAF or WSDF	Because the Municipal Grass Removal Program will not focus on water supply development projects the applicant feels it does not align with WIFA's Long-Term Water Augmentation Fund or the Water Supply Development Fund. The focal point of the conservation activity will be removing grass at parks and facilities managed by the Town of Gilbert to help in reducing outdoor irrigation use and in creating long-term water savings.
Leverage of multiple funds	The Town plans to use internal funds for the match, no other external funding sources are being considered.
Source of funding and match	$750,000 - Match provided from the Town of Gilbert

Capacity, Feasibility, & Public Comment
Statutory Evaluation Criteria #6, #7, and #8

Qualifications and capacity of applicant	The Town of Gilbert cites its past success of removing grass at the Town's parks and facilities as the necessary qualifications and capacity for completing the proposed water conservation activity. Starting in 2013 through 2020, the Town has removed 126,600 sq ft of grass at 6 different areas through contracting out the work for engineering and construction, which is typical for the Parks and Facilities Department and is within its normal operations. The only past managerial deficiency noted from these activities was the delay in removing more grass due to the lack of funding to continue the program at the scale and timeline desired. The individuals who will be collaborating and managing this activity are Town of Gilbert staff, which includes: Kylie Sorensen - Parks & Recreation Manager Zachary Poweziak - Park Operation Superintendent Scott Hesser - Parks Field Supervisor Richard Bay - Parks Field Supervisor
Feasibility of project/program	The applicant feels feasibility of completing this water conservation activity is very high. Past success from removing grass within the Town of Gilbert's parks and facilities has provided the experience needed to accomplish the goal of this program. With the additional funding from this grant, the Town would be able to accelerate the timeline in removing the 567,000 sq ft of grass mentioned within the required two-year time frame. The estimated time commitment from Parks and Facilities staff is 15% over the duration of the program and this is reasonable given other time commitments. Time commitment for Water Conservation is estimated at 5% to assist in program completion.
Public comments	The community of Gilbert has adopted the water wise mindset to ensure water conservation is more attainable and effective. Examples of this support is seen from the collaboration and close working relationships

	between internal departments such as with Parks and Facilities who have committed to conserving water. Evidence of this is seen in the Waterfluence program and the achievement of 28 parks and facilities that received the recognition of Water Wise Gilbert for 2022. The Town of Gilbert is also in Stage 1 of the Water Supply Reduction Management Plan that supports this type of conservation activity. In addition, the Town has showed its support by the funding package to be approved by the Mayor and Council to assist with this program.

Technical Review:

The Applicant **has a current SAM.GOV UEI #** which allows them to apply for federal funds.

The applicant has completed all steps in the grant application process and is requesting funding for a program that is acceptable under the regulations. The Municipal Grass Removal Program has already been a success for the Town and additional funding will allow them to reach their end goal sooner than originally anticipated.

Expenditure Code 5.8 Clean Water: Water Conservation

ARPA Final Rule (31 CFR Part 35 RIN 1505–AC77) defines water infrastructure projects as "eligible projects under the Clean Water State Revolving Fund." "A project shall meet the criteria of CWSRF eligibility found in Section 603(c) of the Clean Water Act (CWA)". Specific Expenditure Codes were created to define activities available under the water infrastructure category.

The Interagency Service Agreement (ISA-ARPA-WIFA-070122-01) between the State of Arizona, Office of the Governor and WIFA required the project / program be specific to Expenditure Code 5.8 Clean Water: Water Conservation.

WIFA staff find this project / program is consistent with Expenditure Code 5.8 Clean Water: Water Conservation as determined in Section 603c of the Clean Water Act (CWA) and the ISA.

Attachments:

- Gilbert, Town of – WC1-016-2023
- Budget

Evaluation Criteria Statutory Reference:

49-1334. **<u>Evaluation criteria for water conservation programs and projects from the water conservation grant fund; procedures</u>**

The authority shall determine the order and priority of water conservation programs and projects proposed to be funded in whole or in part with monies from the water conservation grant fund based on the following, as applicable:

1. The extent to which the water conservation program or project achieves one or more of the results prescribed by section 49-1332, subsection A.
2. The costs and benefits of the water conservation program or project, including environmental costs and benefits.
3. If the water conservation program or project is eligible for funding from the long-term water augmentation fund established by section 49-1302 or the water supply development revolving fund established by section 49-1271 and if the nature of the water conservation program or project makes funding from the long-term water augmentation fund or the water supply development revolving fund impractical.
4. The ability to provide multiple benefits.
5. The degree to which the water conservation program or project will maximize or leverage multiple available funding sources, including federal funding.
6. The qualifications and capacity of an applicant.
7. The feasibility of the water conservation program or project.
8. Public comments.

WCGF Committee Evaluation:

☐ Recommend Rejection of Grant Application

☐ Recommend Approval of Grant Application

☐ Recommend Approval of Grant Application with Modifications

Tab 5

AGENDA ITEM:

Recommend Approval of Grant Application WC1-018-2023 – City of Glendale – WCGF – $3,000,000

ACTION REQUIRED:

Review, Discuss & Recommend Approval

PREVIOUS ACTION:

None

STAFF CONTACT:

Lindsey Jones

RECOMMENDED DISCUSSION TIME:

5 Minutes

ATTACHMENTS:

- Grant Application WC1-018-2023 – City of Glendale
- Water Conservation Grant Fund Evaluation

STAFF COMMENTS:

None

City of Glendale Right Of Way Xeriscape Landscape Program

Profile : jgurrola@glendaleaz.com

Entity Name: : City of Glendale, Transportation Department, 6210 W. Myrtle Ave. Suite 112, Glendale AZ 85301

I. General Information

1. Title of Project: : City of Glendale Right Of Way Xeriscape Landscape Program

2.Type of Conservation Activity (A.R.S. § 49-1332(B)): : Programs and projects that reduce water use Per A.R.S. 49-1332(B)(2)

Note: for the purpose of the application, the term project and program will be referred to as “conservation activity”

3. Is this for an individual Water Conservation Project or a general Water Conservation Program? : Water Conservation Programm

Please describe the specific components that make it a program. : The City of Glendale, Right of Way Xeriscape Landscape Program is a general water conservation program, since the water efficiency usage will be distributed citywide via the conversion of right of ways to xeriscape landscape and smart irrigation technology which will perpetually reduce the city’s water consumption. The water efficiency usage will be through two components that make-up the program: 1) conversion of right of ways to xeriscape landscape, and 2) smart irrigation technology. These components will perpetually reduce the city’s water consumption and, if awarded, this grant will help maintain long-term sustainable xeriscape landscape infrastructure that will help meet Glendale’s water conservation goals and improve aesthetic appeal for residents. It is anticipated that approximately 55.65 AF or 30% reduction in irrigation needs will be accomplished through implementation of this program.

4. What is the location of conservation activity?

City: : City of Glendale

County: : Maricopa

Program/Project Congressional District (check all that apply) :

3

8

9

Program/Project Legislative District (check all that apply) :

22

24

25

26

27

29

Watershed : Middle Gila

Active Management Area (if applicable): : Phoenix Active Managment Area

Irrigation Non-Expansion area (if applicable): :

5.Conservation Activity Cost

Amount requested from the WCGF for this activity: : $3,000,000.00

Amount of matching funds: : $3,259,290.00

Total conservation activity cost: : $6,259,290.00

When applying for the grant, note that a single water conservation program grant may not exceed $3,000,000. A single water conservation project grant may not exceed $250,000. The WCGF requires at least a twenty-five percent match for each water conservation program or project.

6. What is the estimated water savings in acre-feet per year? : 56

Explain calculation: : Xeriscaping (drought tolerant trees & shrubs) = 37AF; Water Harvesting Features = 6AF; Smart Irrigation Systems = 3AF; Install More Decorative Rock = --AF; Natural Turf Removal = 10AF; EX. Natural Grass water usage – Per 1000 SF = 35,000 Gal/Yr Xeriscape water usage – Per 1000 SF = 15,000 Gal/Yr Water savings of natural grass to xeriscape conversion (USGS) – 50%-75% The City of Glendale currently has 158,400 SF of natural grass medians. Sample calc. in water savings for natural grass conversion: 158.4 x 20,000 = 3,168,000 Gal/Yr = 9.72 AF

7. What is the expected duration of the conservation activity? : The conservation activity's duration is perpetual. Funding will pay for half of the City's efforts in planting drought tolerant plant material that, in conjunction with water harvesting features and smart irrigation, reduce the water usage in the program area by approximately 55.65 AF per year, which is a 30% reduction in irrigation water use. In addition, the program will install decorative rock for dust control purposes. No water savings are attributed to this component due to smart irrigation watering plant material before sunrise/after sunset. However, there will be some reduction in evaporation that cannot be quantified. The program with this funding will be completed before December 31, 2026. However, the City is committed to funding the program in perpetuity with its own funding in order to maintain the long-term water conservation goals that is the central focus of this program and continue the stewardship efforts towards future drought conditions.

II. Conservation Activity Benefits and Results

8. What is the water conservation activity you propose to fund with grant monies? Describe in detail. : The proposed water conservation activity listed below will be funded with this grant program: Xeriscaping (drought tolerant trees & shrubs) 37.58 Acre-Feet $1,364,525 Water Harvesting Features 5.57 Acre-Feet $325,483 Smart Irrigation Systems 2.78 Acre-Feet $1,384,868 Natural Turf Removal 9.72 Acre-Feet $2,613,254 Install More Decorative Rock -- Acre-Feet $571,160 TOTAL WATER SAVINGS 55.65 Acre-Feet $6,259,290

9. What is the source of the water that will be conserved? If it is mainstem Colorado River water or Colorado River water delivered through the Central Arizona Project, please clearly indicate so. : The City of Glendale receives an allotment of water from the Salt River Project (SRP) and Central Arizona Project (CAP). This renewable surface water supply accounts for approximately 85-95% of the city's total water supply. The Glendale Water Services Department cleans and transports an average of 13 billion gallons (41,000-acre feet) of drinking water, and over 6 billion gallons (18,400-acre feet) of wastewater per year. This includes water service delivery to over 61,000 connections and over 248,000 people within the community.

10. Describe the community (population size, demographics, principal economic activities, etc.) impacted by the conserved water. : According to the U.S. Census, in 2020 the City of Glendale was the sixth largest city in Arizona with a population of 248,325. Due to continued growth in both population and land area, the city has become a hub for healthcare and entertainment with numerous national and regional firms calling the city home along with Luke Airforce Base (Luke AFB), a major U.S. training base. It is also known for hosting major national events in the Glendale Sports and Entertainment District such as the Super Bowl LVII and various college championships. The city is comprised of a diverse community impacted by the conserved water such as 40.2 percent Hispanic or Latino of any race; 7.9 percent Black or African American; and 5.6 percent Asian (U.S. Census). On average, residents in Glendale use 9,000 gallons of water and generate 6,800 gallons of wastewater per month (2021 Water Quality Report). Current Right-Of-Way maintenance and landscape activities account for about 445.2 acre-feet of water with a potential of up to 556.5 acre-feet under standard conditions.

11. What is the extent to which your water conservation activity achieves one or more of the following (select all that apply): :

value1

value2

value3

Describe: : The proposed water conservation activity will be a model program for other municipalities to emulate and realize long-term water savings and usage along their City owned and maintained rights-of way. The proposed water conservation activity will achieve long-term reductions in water use and serve a model program for other municipalities to emulate and realize long-term water savings and usage for their jurisdiction owned and maintained rights-of-way. Additionally, under general guidance from the Arizona Municipal Water Users Association, the conservation activity will lead to improvements in water use efficiency by planting highly drought tolerant species of trees, shrubs, and cacti along its city owned and maintained rights-of-way. This, coupled with diligent usage of water harvesting features, smart irrigation systems, and the installation of decorative rock, will lead to good water use efficiency and stewardship and further balance water conservation and aesthetic appeal. Implementation of this program will free up more water that will be available for other users in the City. This will improve the overall sustainability of the City's various water sources.

12. What is the extent to which your water conservation activity addresses one of more of the following: :

Water supply shortages

Describe: : The proposed activity will reduce water use throughout the Glendale owned and maintained landscaping within the right-of-way, including the areas that are primarily served with CAP water. The program is expected to result in annual water savings of 55.65 acre-feet, which will diminish the need for Colorado River water.

13. How will your water conservation activity align with a local, regional, or statewide water plan or integrated resource management plan? : The Glendale City Council approved the City's Water Conservation Program in 1985 in response to Arizona's 1980 Groundwater Management Act. Under the Phoenix Active Management Area Fourth Management Plan, Glendale maintains a diversity of water conservation programs, ranging from audits to a landscape rebate program to a xeriscape demonstration garden. In 1986, Glendale City Council approved a landscape rebate program to incentivize the conversion of grass to xeriscape for non-residential customers, including homeowners' associations, businesses, and schools. This proposal also aligns with the "2022 City of Glendale's Integrated Water Master Plan" including the following bullet points: • Continue the Landscape Rebate Program as there are potentially thousands of homes, and hundreds of multi-family units, commercial, and City facilities that could achieve water savings through voluntary turf removal. • Seek additional new funding sources, such as U.S. Bureau of Reclamation to support water efficiency incentives. • City Council also provided their support for the new landscape standards in the right-of-way in an effort to conserve water and adapt to the new drought conditions.

14. What are the costs and benefits of your water conservation activity, including any environmental impacts? : This proposal will result in several benefits, including water and energy conservation, pollution reduction through the elimination of irrigation runoff, dust control, and reduced maintenance costs. Additionally, xeriscape benefits the local wildlife by providing habitat (especially for pollinating insects), whereas turfgrass provides minimal habitat to species.

15. How will you measure the effectiveness of the conservation activity? : City staff will conduct a comprehensive evaluation of the proposed activity that includes the following: 1) statistical analysis to measure the change in water use of sites two-years before and two-years after implementation of the program, and 2) GIS map to show landscape locations. A report describing the statistical methods and results will be submitted. These results will be used to make future program modifications. Results from the proposed activity will be shared with WIFA, Arizona Municipal Water Users Association members, and the Arizona Water Association's Conservation Committee.

III. Funding Sources

16. If your water conservation activity is eligible for funding from WIFA's Long-Term Water Augmentation Fund or Water Supply Development Fund, does the nature of your conservation activity make funding from those funds impractical, and why? : No, there are no known impacts of this potential WCGF funding to other known and potential funding sources for this program.

17. Would the conservation activity be otherwise implemented without this grant funding? Explain. : Yes, however, not at this scale and time. The program is currently partially funded, which will be used to match the WCGF grant funding, if secured.

18. To what extent will your water conservation activity maximize or leverage multiple available funding sources, including federal funding? : The City is using state gas tax funds, City General funds, and state legislature funds. Other funding sources like federal funds will also be pursued.

19. Are there cost-sharing opportunities with other applicants or other parties? Explain. : No, this program is 100% in the public right-of-way. While not part of this program, commercial and homeowner associations responsible for right-of-way landscape along their street frontages will also be required to follow these new standards and encouraged to retrofit their existing landscaping to the new standards.

20. What is the source and amount of the match (including in-kind match)? : The Fiscal Year 2024-2033 Capital Improvement Plan for the City of Glendale includes $2,757,290 in General Fund budget toward this program in kind match from the Highway User Revenue Fund; will also serve as a match to the funding being sought through this grant toward this program.

IV. Capacity, Feasibility, & Public Comment

21. What qualifications and capacity do you have for completing your proposed water conservation activity? Include any past managerial deficiencies and provide the name(s) and qualifications of the individual(s) or entities who will be managing this activity. : Purab Adabala, City of Glendale, Deputy Director, Transportation Javier Gurrola PE, City of Glendale, Principal Engineer, Transportation Fred Sanchez, City of Glendale, Right of Way Supervisor, Transportation Joanne Toms, City of Glendale, Environmental Program Administrator, Water Services Anne Stahley, City of Glendale, Water Conservation Specialist, Water Services Over the past ten years, Glendale has been awarded grants for a variety of water-use efficiency projects, all of which have either been completed successfully or are in the process of being completed. 2014 National Fish and Wildlife Foundation, FedEx, Bank of America: Rain Garden at the Glendale Xeriscape Demonstration Garden-The 3,500 square foot Glendale Rain Garden features rainwater harvesting basins, native Sonoran Desert plants, and an interpretive sign on the benefits of rainwater harvesting. 2014 Water Infrastructure Finance Authority: Low Impact Development (LID) Toolkit-Assess Glendale's storm water–related engineering standards. A consultant, funded through the grant, provided Glendale with a green infrastructure LID toolkit. 2017 Central Arizona Project: Rain Garden at the Glendale Community Center North-The 5,000 square foot Glendale Rain Garden features rainwater harvesting basins, native Sonoran Desert plants, and an interpretive sign on the benefits of rainwater harvesting. 2017 Arizona Department of Forestry and Fire Management: Glendale Food Forest at the Glendale Xeriscape Demonstration Garden-The 3,000 square foot Desert Food Forest features rainwater harvesting basins, Sonoran Desert edible plants, and an interpretive sign on how to create a food forest. 2017 Arizona Department of Water Resources: Multi-City Single Family Residential Water Use Study-A study with the municipalities of Gilbert and Phoenix to assess water use and landscape types in single-family residential properties. 2022 U.S. Bureau of Reclamation: Landscape Irrigation Technology Incentive Project for Municipal and Non-Residential Customers-Purchase and installation of landscape irrigation technology.

22. Will there be significant management impacts as the result of the proposed conservation activity, or any technology associated with the conservation activity? (For example: additional costs or staffing requirements) : The City of Glendale plans to use existing staff to cover the additional responsibilities to coordinate the proposed activity.

23. Will the proposed conservation activity promote collaborative partnerships to address water-related issues? Explain. : Yes. This proposed conservation activity will complement the City's existing landscaping standards: Water harvesting features are highly encouraged along with innovative smart irrigation systems; a preferred drought tolerant palette of trees and shrubs/groundcover are provided for various City projects and private developers and as published by the Arizona Municipal Water Users Association. The new right-of-way landscape standard will also be applicable to HOA's and businesses currently operating in Glendale. This should help generate additional conservation opportunities in the City.

24. What is the stakeholder involvement in the conservation activity planning process? : The City of Glendale has already presented the proposed conservation activity to the Citizens Transportation Oversight Commission to receive input on the proposed program. The Commission will have continuous input throughout the life of the program. Furthermore, this program was also presented to the City Council and received unanimous support.

25. Will the proposed conservation activity include public outreach and opportunities for the public to learn about the conservation activity? Explain. : Yes, the proposed conservation activity will include public outreach and opportunities for the public to learn about the conservation activity. This proposed program will be introduced during the various regularly held Council District meetings detailing the plan and emphasizing the many benefits of

water conservation and maintaining the aesthetic appeal. Also considered are neighborhood meetings along the street frontages and any other ad hoc Council District Meetings.

26. Is there community and/or sector support for the conservation activity? Explain. : Yes, Council is supportive of this program. Also, at various public meetings, staff has received supporting comments from residents. The Citizens Transportation Oversight Commission has also stated its support of this program. See letter of support in "Additional Supporting Documents".

27. How feasible is it to complete your water conservation activity? Explain. : The City of Glendale Transportation Right-Of-Way Division has dedicated staff and enough resources to manage and uphold the contractor obligations, such as contract management, compliance, and inspections.

28. If the conservation activity is a continuation of ongoing activities, has the activity been shown to be effective? If a new activity, has the proposed project, technology, or technique previously been implemented? : No, this is a new program. However, the program components are consistent with water conservation activities and other programs in general, eg. City of Glendale Drought Management Plan 2022.

29. Will the proposed conservation activity implement an established Best Management Practice? Explain. : Yes, the proposed conservation activity will implement an established Best Management Practice. Low water use landscaping is a requirement for municipal providers under the Arizona Department of Water Resources' 4th Management Plan. The municipal provider or individual user shall serve or use groundwater for the purpose of watering landscaping plants planted on or after January 1st, 1987 within any publicly owned right-of-way of a highway, street, road, sidewalk, curb or shoulder which is used for traveling in any ordinary mode, including pedestrian travel, only if the plants are listed in ADWR's low water use drought tolerant plant list for the Phoenix Active Mangement Area. The program is also installing smart irrigation systems which is identified as a Best Management Practice. Source: https://new.azwater.gov/sites/default/files/media/FULL%20FINAL%20PHX%204MP_1.pdf See this document in "Additional Supporting Documents" for this grant application.

Additional Supporting Documentation (pdf, jpg, word, excel) : FULL FINAL PHX 4MP_1.pdf

Additional Supporting Documentation (pdf, jpg, word, excel) : CTOC Letter of Support CTOC Approved Final - signed.pdf

Additional Supporting Documentation (pdf, jpg, word, excel) :

Additional Supporting Documentation (pdf, jpg, word, excel) :

Additional Supporting Documentation (pdf, jpg, word, excel) :

Average Score :

# of Reviews : 0

# of Denials : 0

Please use the following link to view the Budget

Budget Worksheet :

View Budget Worksheet : https://portal.ecivis.com/#/peerBudget/BC0F4DB2-B59F-452B-8204-F25635BF738E

Application Goals :

View Application Goals : https://portal.ecivis.com/#/peerGoals/89A93577-DEA4-44BF-BF62-C2C0F860EC82

Created by : zengine+36768@srm.ecivis.com

Record ID # : 50737658

Last change : 2023-05-18T20:14:41+0000

Application Budget for City of Glendale, Transportation Department, 6210 W. Myrtle Ave. Suite 112, Glendale AZ 85301

Program: Water Conservation Grant Fund (WCGF)
Project name: City of Glendale Right Of Way Xeriscape Landscape Program

Budget Stage:

Pre-Award

Actions

Budget Summary

Total Direct Costs	$6,179,343.20
Total Indirect Costs	$0.00
Total Amount (Direct + Indirect)	$6,179,343.20
Match / Cost Share	$3,259,347.00

$0.00

Program Income

Budget Settings

Budget Items

Ext Cost **Direct Cost** **Ind Cost** **Cost Share**

1. Personnel

$422,053.20

$422,053.20

$0.00

Ext Cost **Direct Cost** **Ind Cost** **Cost Share**

$422,053.00

2. Fringe Benefits

$80,004.00

$0.00

$0.00

Ext Cost **Direct Cost** **Ind Cost** **Cost Share**

$80,004.00

3. Travel

$0.00

$0.00

$0.00

Ext Cost **Direct Cost** **Ind Cost** **Cost Share**

$0.00

4. Equipment

$0.00

$0.00

$0.00

Ext Cost **Direct Cost** **Ind Cost** **Cost Share**

$0.00

5. Supplies

$0.00

$0.00

$0.00

Ext Cost **Direct Cost** **Ind Cost** **Cost Share**

$0.00

6. Contractual

$2,757,290.00

$2,757,290.00

$0.00

Ext Cost **Direct Cost** **Ind Cost** **Cost Share**

$2,757,290.00

7. Construction

$0.00

$0.00

$0.00

Ext Cost **Direct Cost** **Ind Cost** **Cost Share**

$0.00

8. Indirect Costs

$0.00

$0.00

$0.00

Ext Cost **Direct Cost** **Ind Cost** **Cost Share**

$0.00

9. Other

$3,000,000.00

$3,000,000.00

$0.00

$0.00

Other

Program Income

Income

1. Program Income

$0.00

Budget Narrative

Over the next three years, the City Transportation Department is committed to contributing $2.76M in contractual services funded by the City and $502K in-kind staff time to expand the City's existing landscape program by implementing the Right of Way Xeriscape Landscape Program. This program is a general water conservation program. The water efficiency usage will be distributed citywide through two components that make-up the program: 1) conversion of right of ways to xeriscape landscape, and 2) smart irrigation technology. These components will perpetually reduce the city's water consumption and, if awarded, will help maintain long-term sustainable landscape infrastructure that will help meet Glendale's water conservation goals and improve aesthetic appeal for residents.

It is anticipated that approximately 55.65 AF or 30% reduction in irrigation needs will be accomplished through implementation of this program. The City is requesting $3,000,000 from the Water Conservation Fund Grant to provide a solid foundation to implement this perpetual water conservation program.

Three key Glendale Transportation staff will coordinate the implementation of the Xeriscape program. The following personnel will be involved in the program:
· **Principal Engineer** at approximately 585 hours for 3 years – Oversees the entire program and approves invoices and monitors the overall budget for QA/QC control.
· **Right of way Supervisor** at approximately 4500 hours for 3 years – Prioritizes the yearly program and selects which areas to get treated; communicates milestones to management level staff and City Council; prepares reports/updates throughout his/her tenure of the program; schedules, attends, and runs weekly meetings with landscape contractors; approves quotes from contractors for work tasks.
· **Right of way Contract Monitor** at approximately 6000 hours for 3 years – Involved with the day to day contractual activities by hired contractors; inspects daily work for QA/QC compliance; attends weekly meetings with contractors; is the first in line when contractual requirements are not being met; receives invoices for initial acceptance based on completed work tasks.

5829 characters remaining

May 15, 2023

Laurie Gehlsen
WIFA Grant Coordinator
100 N. 7th Ave. Suite 130
Phoenix, AZ 85007

RE: Letter of Support for the City of Glendale, Arizona's
Application to Fund the Right of Way Landscape Plan Implementation Project

Dear Ms. Gehlsen:

The Glendale Citizens Transportation Advisory Commission (CTOC) is pleased to support the City's application for the fiscal year **(FY) 2023 Water Conservation Grant** to implement the Glendale Right of Way Landscape Plan. During our May 2023 meeting the CTOC discussed water conservation goals for the city-owned right of way and expressed support for the application.

The Right of Way Landscape Plan (the Plan) details a long-term sustainable landscape infrastructure model with water conservation strategies; and new standards that incorporate drought tolerant plant species, water harvesting features, and smart irrigation systems. The Plan helps the city strike a balance between using water wisely and creating and maintaining the aesthetically appealing street frontages desired by residents and appropriate for the desert environment.

Under the Plan, city water usage is projected to be reduced by 111.3 acre-feet. As residents of the City of Glendale, the CTOC urges the committee's full and fair consideration of the application for the Right of Way Landscape Plan Implementation project.

Sincerely,

Bryon A. Joyce (May 15, 2023 09:44 PDT)

Bryon Joyce
CTOC Chairperson

5850 W. Glendale Ave. 623.930.2000
Glendale, AZ 85301

CTOC Letter of Support CTOC Approved Final

Final Audit Report 2023-05-15

Created:	2023-05-15
By:	PATRICK SAGE (PSAGE@GLENDALEAZ.COM)
Status:	Signed
Transaction ID:	CBJCHBCAABAA2vBc5vcAitlpqQQVRlVEGZZuyqF8GFes

"CTOC Letter of Support CTOC Approved Final" History

Document created by PATRICK SAGE (PSAGE@GLENDALEAZ.COM)
2023-05-15 - 3:58:39 PM GMT- IP address: 208.48.8.4

Document emailed to bryonajoyce@gmail.com for signature
2023-05-15 - 4:00:01 PM GMT

Email viewed by bryonajoyce@gmail.com
2023-05-15 - 4:00:04 PM GMT- IP address: 66.249.92.38

Signer bryonajoyce@gmail.com entered name at signing as Bryon A. Joyce
2023-05-15 - 4:44:22 PM GMT- IP address: 75.167.212.232

Document e-signed by Bryon A. Joyce (bryonajoyce@gmail.com)
Signature Date: 2023-05-15 - 4:44:24 PM GMT - Time Source: server- IP address: 75.167.212.232

Agreement completed.
2023-05-15 - 4:44:24 PM GMT

Adobe Acrobat Sign

Water Conservation Grant Fund Application Evaluation
Round 1

City of Glendale – Right of Way Xeriscape Landscape Program	**WC1-018-2023**
Grant Amount	$3,000,000
Category	Turf Removal
Summary	The proposed water conservation activity listed below will be funded with this grant program: (1) Xeriscaping (drought tolerant trees & shrubs), (2) Water Harvesting Features, (3) Smart Irrigation Systems, (4) Natural Turf Removal, (5) Install More Decorative Rock.
Location	City of Glendale, Maricopa County
Estimated water savings in acre-feet per year	56
Duration of project/program	2.5 years for implementation Applicant expects conservation benefits to continue well into the future.

Conservation Activity Benefits and Results

Statutory Evaluation Criteria #1, #2, and #4

Activity Type	Programs and projects that reduce water use Per A.R.S. 49-1332(B)(2)
Source of water	The City of Glendale receives an allotment of water from the Salt River Project (SRP) and Central Arizona Project (CAP). This renewable surface water supply accounts for approximately 85-95% of the city's total water supply. The Glendale Water Services Department cleans and transports an average of 13 billion gallons (41,000-acre feet) of drinking water, and over 6 billion gallons (18,400-acre feet) of wastewater per year. This includes water service delivery to over 61,000 connections and over 248,000 people within the community.
Community information	According to the U.S. Census, in 2020 the City of Glendale was the sixth largest city in Arizona with a population of 248,325. Due to continued growth in both population and land area, the city has become a hub for healthcare and entertainment with numerous national and regional firms calling the city home along with Luke Airforce Base (Luke AFB), a major U.S. training base. It is also known for hosting major national events in the Glendale Sports and Entertainment District such as the Super Bowl LVII and various college championships. The city is comprised of a diverse community impacted by the conserved water such as 40.2 percent Hispanic or Latino of any race; 7.9 percent Black or African American; and 5.6 percent Asian (U.S. Census). On average, residents in Glendale use 9,000 gallons of water and generate 6,800 gallons of wastewater per month (2021 Water Quality Report). Current Right-Of-

	Way maintenance and landscape activities account for about 445.2 acre-feet of water with a potential of up to 556.5 acre-feet under standard conditions.
Costs and benefits of project/program	This proposal will result in several benefits, including water and energy conservation, pollution reduction through the elimination of irrigation runoff, dust control, and reduced maintenance costs. Additionally, xeriscape benefits the local wildlife by providing habitat (especially for pollinating insects), whereas turfgrass provides minimal habitat to species.

Funding Sources
Statutory Evaluation Criteria #3 and #5

Eligibility for LTWAF or WSDF	The applicant did not provide justification why the LTWAF or WSDF would be impractical for this project/program. This activity would occur within an Active Management Area and therefore is not eligible for WSDF. Applicant did not note if taking a loan from the LTWAF would be impractical for this activity.
Leverage of multiple funds	$3,259,290.00 - The City plans to use state gas tax funds, City General funds, and state legislature funds. Other funding sources like federal funds will also be pursued.
Source of funding and match	The Fiscal Year 2024-2033 Capital Improvement Plan for the City of Glendale includes $2,757,290 in General Fund budget toward this program in kind match from the Highway User Revenue Fund; will also serve as a match to the funding being sought through this grant toward this program.

Capacity, Feasibility, & Public Comment
Statutory Evaluation Criteria #6, #7, and #8

Qualifications and capacity of applicant	-Purab Adabala, City of Glendale, Deputy Director, Transportation -Javier Gurrola PE, City of Glendale, Principal Engineer, Transportation -Fred Sanchez, City of Glendale, Right of Way Supervisor, Transportation -Joanne Toms, City of Glendale, Environmental Program Administrator, Water Services -Anne Stahley, City of Glendale, Water Conservation Specialist, Water Services
Feasibility of project/program	The City of Glendale Transportation Right-Of-Way Division has dedicated staff and enough resources to manage and uphold the contractor obligations, such as contract management, compliance, and inspections.
Public comments	Yes, Glendale City Council is supportive of this program. Also, at various

	public meetings, staff have received supporting comments from residents. The Citizens Transportation Oversight Commission has also stated its support of this program.

Technical Review:

The Applicant **<u>has a current SAM.GOV UEI</u> #** which allows them to apply for federal funds.

The applicant has completed all steps in the grant application process and is requesting funding for a project / program that is acceptable under the regulations.

Expenditure Code 5.8 Clean Water: Water Conservation

ARPA Final Rule (31 CFR Part 35 RIN 1505–AC77) defines water infrastructure projects as "eligible projects under the Clean Water State Revolving Fund." "A project shall meet the criteria of CWSRF eligibility found in Section 603(c) of the Clean Water Act (CWA)". Specific Expenditure Codes were created to define activities available under the water infrastructure category.

The Interagency Service Agreement (ISA-ARPA-WIFA-070122-01) between the State of Arizona, Office of the Governor and WIFA required the project / program be specific to Expenditure Code 5.8 Clean Water: Water Conservation.

WIFA staff find this project / program is consistent with Expenditure Code 5.8 Clean Water: Water Conservation as determined in Section 603c of the Clean Water Act (CWA) and the ISA.

Attachments:

- Glendale Application – WC1-018-2023
- Budget
- Letters of Support

Evaluation Criteria Statutory Reference:

49-1334. **<u>Evaluation criteria for water conservation programs and projects from the water conservation grant fund; procedures</u>**

The authority shall determine the order and priority of water conservation programs and projects proposed to be funded in whole or in part with monies from the water conservation grant fund based on the following, as applicable:

1. The extent to which the water conservation program or project achieves one or more of the results prescribed by section 49-1332, subsection A.
2. The costs and benefits of the water conservation program or project, including environmental costs and benefits.
3. If the water conservation program or project is eligible for funding from the long-term water augmentation fund established by section 49-1302 or the water supply development revolving fund established by section 49-1271 and if the nature of the water conservation program or project makes funding from the long-term water augmentation fund or the water supply development revolving fund impractical.
4. The ability to provide multiple benefits.
5. The degree to which the water conservation program or project will maximize or leverage multiple available funding sources, including federal funding.
6. The qualifications and capacity of an applicant.
7. The feasibility of the water conservation program or project.
8. Public comments.

WCGF Committee Evaluation:

☐ Recommend Rejection of Grant Application

☐ Recommend Approval of Grant Application

☐ Recommend Approval of Grant Application with Modifications

Tab 6

AGENDA ITEM:

Recommend Approval of Grant Application WC1-019-2023 – City of Goodyear – WCGF – $74,000

ACTION REQUIRED:

Review, Discuss & Recommend Approval

PREVIOUS ACTION:

None

STAFF CONTACT:

Lindsey Jones

RECOMMENDED DISCUSSION TIME:

5 Minutes

ATTACHMENTS:

- Grant Application WC1-019-2023 – City of Goodyear
- Water Conservation Grant Fund Evaluation

STAFF COMMENTS:

None

Commercial, Institutional, Industrial, and HOA Lawn Removal Incentive

Profile : Andrew.Pirrone@Goodyearaz.gov

Entity Name: : City of Goodyear

I. General Information

1. Title of Project: : Commercial, Institutional, Industrial, and HOA Lawn Removal Incentive

2.Type of Conservation Activity (A.R.S. § 49-1332(B)): : Programs and projects that reduce water use Per A.R.S. 49-1332(B)(2)

Note: for the purpose of the application, the term project and program will be referred to as “conservation activity”

3. Is this for an individual Water Conservation Project or a general Water Conservation Program? : Water Conservation Programm

Please describe the specific components that make it a program. : This is a Water Conservation ‘Program’ because lawn removal incentives will be applied to multiple locations and customers throughout our service area over a continuous period of time.

4. What is the location of conservation activity?

City: : Goodyear

County: : Maricopa

Program/Project Congressional District (check all that apply) :

7

9

Program/Project Legislative District (check all that apply) :

23

Watershed : Middle Gila Watershed; West Salt River Valley Sub-Basin

Active Management Area (if applicable): : Phoenix

Irrigation Non-Expansion area (if applicable): :

5.Conservation Activity Cost

Amount requested from the WCGF for this activity: : $74,000.00

Amount of matching funds: : $18,500.00

Total conservation activity cost: : $92,500.00

When applying for the grant, note that a single water conservation program grant may not exceed $3,000,000. A single water conservation project grant may not exceed $250,000. The WCGF requires at least a twenty-five percent match for each water conservation program or project.

6. What is the estimated water savings in acre-feet per year? : 40

Explain calculation: : One acre of overseeded lawn uses about 1.8M gallons (5.5 Ac Ft) per year, one acre of urban desert plants consumes about 0.3M Gallons (1 Ac Ft) per year. Goodyear Water service area has around 400 Acres of non-residential lawn. Our goal would be to remove as many acres as possible through this incentive. Realistically, we can aim to reduce this by 5-8% (20-32 Acres of lawn) through the end of 2026. We estimate between 30-50 Acre Feet of savings (9.8M – 16.3M Gal) annually would be saved by reducing at least 7 acres of turf per year. (305,000 sq ft). This is a conservative estimate as many large landscapes will remove more area than our proposed annual incentive cap per customer. Savings of 100+ Acre Feet annually are possible depending on the type of projects that are completed and specific customers' water use history.

7. What is the expected duration of the conservation activity? : The expected duration of the benefits of lawn removal would be in perpetuity. The expected duration of the lawn removal incentive is until funds are depleted. Goodyear will aim to maintain a non-residential lawn removal incentive program at a smaller scale in perpetuity as part of our water conservation master plan.

II. Conservation Activity Benefits and Results

8. What is the water conservation activity you propose to fund with grant monies? Describe in detail. : The conservation activity includes sending money to locations in Goodyear Water service area classified as commercial, institutional, industrial, or HOA that remove lawn on their property and replace it with a non-lawn alternative. • The water customer must remove at least 1,500 square feet of lawn to qualify. • Incentive amount is based on 20% of the total project cost up to $7,000. This method reduces staff time for field measurements and provides flexibility for customer options. • To qualify, an entity must be a non-residential water customer in the Goodyear Water Service area. (E.g. Church, School, HOA, Business). • Goodyear Water Conservation staff will work to guide the customer through the process including digitally measuring areas that will be removed for acreage tracking, ensuring plant coverage where appropriate, assisting with timeline or phasing of the project, and coordinating payment.

9. What is the source of the water that will be conserved? If it is mainstem Colorado River water or Colorado River water delivered through the Central Arizona Project, please clearly indicate so. : Goodyear blends Colorado River water delivered through the CAP Canal with groundwater throughout the service area. The water saved would be a combination of these two sources.

10. Describe the community (population size, demographics, principal economic activities, etc.) impacted by the conserved water. : The city of Goodyear as a whole is about 105,000 residents. About 63,000 of those are within the Goodyear Water Service area while the remainder reside in areas served by private water companies. The incentive would apply to any non-residential water customer in the Goodyear Water Service area. This includes businesses, schools, churches, HOAs, government organizations, multi-family etc. The greatest impact would be primarily in HOAs with large quantities of lawn square footage. These communities are generally most motivated to reduce water consumption and water bills, and Goodyear Water Conservation

already has relationships established with about half of the HOAs within the service area to accelerate this process. Other potential customers include churches and commercial plazas that are in older parts of Goodyear where ornamental lawn installation was more common and has not yet been replaced with desert plants. Industrial, light commercial, and multi-family customers will not be impacted to the same extent due to the lack of established relationships with stakeholders in those customer classes. Although eligible, commercial business are difficult to contact and often do not have as large of quantities of lawn. Multi-family properties have large water savings potential but are often not motivated to make upgrades due to the nature of pass-through costs of utilities to residents.

11. What is the extent to which your water conservation activity achieves one or more of the following (select all that apply): :

value1

value2

value3

Describe: : This program would strive to achieve all of the abovementioned goals. Long term reductions in water use of around 4 – 5 acre feet per acre of lawn removed would be permanent savings. It is rare for businesses or communities to remove existing desert landscaping in favor of lawn. Improvements in water use efficiency would occur as lawn is most commonly irrigated with overhead irrigation such as fixed spray heads and rotors which have high evaporation rates and lower irrigation efficiency than drip irrigation. Desert plants are most commonly irrigated with point-source drip irrigation which places water at lower outputs right into the soil root zone area, thereby reducing losses to evaporation. An acre of desert landscape can be expected to use about 4 – 5 acre feet per year less than an acre of overseeded lawn. Improvements in water reliability would occur due to the lowered summer (peak) demand of desert landscaping. While both lawn and desert plants require about 4 times more water in summer than in winter, desert plants only require about one-fifth of the total amount over the same area. This improves managing peak demand and water reliability over our service area. Additionally, desert plants can go longer without water and still live in the instance of water shortages, thereby reducing losses to our urban forests and the assets associated with our landscapes.

12. What is the extent to which your water conservation activity addresses one of more of the following: :

Water supply shortages

Reliance on non-renewable water supplies

Water quality issues

Describe: : Lawn removal addresses water supply shortages by providing a more resilient landscape type that can withstand longer periods between watering. In the instance of a water supply shortage, desert plants can withstand significantly reduced water application frequency and still not die, while summer Bermuda grass will begin to go into drought dormancy within a week or two depending on the season. In the case of a severe cut to Colorado River supplies, desert landscapes can be leveraged by reducing water to them easier than lawn. This allows the city greater flexibility in ensuring delivery of potable water to essential services and households in the case of a supply shortage because irrigation water meters will have a lower long term demand. This program supports reduction of reliance on non-renewable supplies because, in Goodyear, surface water is prioritized in use as much as possible over groundwater. By reducing demand through irrigation watering, especially in summer, the amount of groundwater pumped is directly reduced

as a function of the increased watering demand. Local water quality is expected to improve by the reduction of dry-weather flow into stormwater basins. Lawn watering results in more runoff and overspray into local stormwater basins, carrying along unwanted pollutants or fertilizers. Removing this source of pollution can help enhance the quality of water ending up in stormwater basins.

13. How will your water conservation activity align with a local, regional, or statewide water plan or integrated resource management plan? : This conservation activity directly aligns with the Goodyear Integrated Water Master plan by bringing the per parcel water use more in line with expected long-term use, as well as the Goodyear Water Conservation Committee's specific outline for reducing water use in the city of Goodyear. Regional efforts in Phoenix aim at reducing outdoor water use, this program directly supports that effort. References: https://new.azwater.gov/conservation/landscaping https://www.goodyearaz.gov/home/showpublisheddocument/28950/637896098176430000 https://www.goodyearaz.gov/government/departments/engineering-development-services/engineering/plan-review/integrated-water-master-plan

14. What are the costs and benefits of your water conservation activity, including any environmental impacts? : The costs include labor and materials needed to remove lawn and install a non-lawn alternative. Potential environmental impacts include additional material sourcing for new irrigation systems, mulch, plants, etc. There are also potential environmental impacts in the lawn removal process since herbicide is typically needed to permanently remove Bermuda lawn from an area. Additionally, caution must be taken by installers to protect existing mature trees that will be retained to ensure proper watering and recovery from nearby herbicide application. The benefits include a permanently reduced water and maintenance demand on an area of landscape. Side benefits include potential improvements to air quality as mowers are no longer needed for ongoing maintenance. Increasing desert plant coverages also improves overall tree canopy within the city and the region, as well as provides better resources for beneficial wildlife than lawn.

15. How will you measure the effectiveness of the conservation activity? : Effectiveness will be measured by quantifying gallons used or saved before the month of change and after the month change for the specific area. Typically, landscape water savings must be evaluated on an annual basis due to seasonality of water use. Water Conservation staff will also track the total square feet removed as well as the gallons per square foot saved.

III. Funding Sources

16. If your water conservation activity is eligible for funding from WIFA's Long-Term Water Augmentation Fund or Water Supply Development Fund, does the nature of your conservation activity make funding from those funds impractical, and why? : This project is not eligible for funding under the Long Term Augmentation Fund or Supply Development Fund. This activity is not an infrastructure project. Although the intent is to save water resources, the activity does not increase the supply of water into the state, so would not qualify in that category.

17. Would the conservation activity be otherwise implemented without this grant funding? Explain. : The conservation activity would still be implemented without this grant funding but at a much smaller scale. The 'matched funds' amount would be the maximum we could offer to our water customers, which would limit the opportunities for annual water savings from implemented lawn removal projects.

18. To what extent will your water conservation activity maximize or leverage multiple available funding sources, including federal funding? : Currently, Goodyear Water Conservation fiscal year budgeted funds is the only other funding source for this program.

19. Are there cost-sharing opportunities with other applicants or other parties? Explain. : Since this particular program is restricted to specific locations within the Goodyear Water service area, it is not practical to partner with another entity.

20. What is the source and amount of the match (including in-kind match)? : The funding source is from Goodyear Water and it includes actual budgeted funds of $18,500.

IV. Capacity, Feasibility, & Public Comment

21. What qualifications and capacity do you have for completing your proposed water conservation activity? Include any past managerial deficiencies and provide the name(s) and qualifications of the individual(s) or entities who will be managing this activity. : Goodyear Water Conservation began this program as a pilot in early 2023. Several applicants have submitted information but no projects have yet broken ground. We plan to utilize the additional funds to more strongly market this program and increase the speed and number of lawn removal projects that are converted. The additional funding will further the opportunity for water customers to participate before funds run out. With our current available funds, only 5-6 projects may be completed. The workflow and internal processes have already been established, so activity can begin taking place immediately. Main program manager: Andrew Pirrone, Goodyear Water Conservation Coordinator for city of Goodyear. Andrew has worked in Arizona Water Conservation for the last 8 years, including 6 years with Gilbert as a Program Specialist, and 2+ years with Goodyears as a Program Coordinator. All the current conservation programs are administered or run by Andrew and his Conservation team members. These programs include an in-person home water audit program, a free rain sensor program, a free home conservation kit program, free water and landscape workshops, and free smart controllers. Before working for municipalities, Andrew worked in the landscape water management industry helping commercial and HOA customers with identifying and implementing water efficient practices in the field. The city of Goodyear has identified lawn removal incentives as a priority for long term water savings and is in support of continuing and expanding this activity.

22. Will there be significant management impacts as the result of the proposed conservation activity, or any technology associated with the conservation activity? (For example: additional costs or staffing requirements) : Because a pilot program is already running, there will only be minimal additional requirements to help as more applications are submitted. Because non-residential projects are larger and less frequent, the assistance we need can be managed in-house with other staff and volunteers helping process paperwork etc.

23. Will the proposed conservation activity promote collaborative partnerships to address water-related issues? Explain. : This activity will promote collaboration with water customers, their landscape contractors, and other stakeholders, such as HOA Board members and community members, to help address water scarcity issues in the desert. These intentional transitions from lawn to non-lawn landscapes can help promote a more water-conscious and water-efficient Goodyear by becoming highly visible to community stakeholders and leaders. Intentional lawn removal will also serve as an example to enhance Arizona’s commitment saving water permanently on the Colorado River.

24. What is the stakeholder involvement in the conservation activity planning process? : This strategy to save water was identified as one of the priorities promoted by the Goodyear Water Conservation Committee and has been well received so far through the pilot program with individual customers.

25. Will the proposed conservation activity include public outreach and opportunities for the public to learn about the conservation activity? Explain. : This activity will include active recruitment and outreach to customers to notify them of the available incentive. The individual lawn removal efforts will be celebrated through the Goodyear Water Efficient Partners Program. This program honors our large landscape water customers who take steps to maintain or improve water efficiency. Successful lawn removal projects will also be publicized with the entities permission on our website, through social media, newspaper outlets etc. to encourage other interested large water customers to consider converting as well.

26. Is there community and/or sector support for the conservation activity? Explain. : Yes. There is support expressed from many HOAs and residents of HOAs within the community. We have also had interest from the private sector. Council and city leadership support the need for reducing non-functional lawn throughout the water service area to enhance the resiliency of Goodyear's water resources.

27. How feasible is it to complete your water conservation activity? Explain. : It is feasible to complete this lawn removal incentive because: • There is already an active pilot program in place with internal processes and buy-in, however only a small number of projects can be completed with our existing funds. • We plan to utilize the additional funds to more strongly market this program and increase the speed and number of lawn removal projects that are converted. The additional funding will further the opportunity for water customers to participate before funds run out. With our current available funds, only 5-6 projects may be completed. • Large landscape customers are actively reaching out for support in ways to reduce water consumption and utility bills. • Goodyear Water service area has around 400 acres of non-residential awn, so there are many opportunities for low-hanging fruit.

28. If the conservation activity is a continuation of ongoing activities, has the activity been shown to be effective? If a new activity, has the proposed project, technology, or technique previously been implemented? : This conservation activity has proven effectiveness throughout Arizona, but especially in the Phoenix Active Management Area due to our warmer, drier springs and summers. City of Scottsdale displayed an average of 30-40 gal/square foot/year of savings from their long-standing lawn replacement program.

29. Will the proposed conservation activity implement an established Best Management Practice? Explain. : Yes, this activity will implement the best management practice from the Phoenix AMA 4th Management Plan BMP No. 6.15 Non-Residential Landscape Conversion.

Additional Supporting Documentation (pdf, jpg, word, excel) :

Additional Supporting Documentation (pdf, jpg, word, excel) :

Additional Supporting Documentation (pdf, jpg, word, excel) :

Additional Supporting Documentation (pdf, jpg, word, excel) :

Additional Supporting Documentation (pdf, jpg, word, excel) :

Average Score :

# of Reviews : 0

# of Denials : 0

Please use the following link to view the Budget

Budget Worksheet :

View Budget Worksheet : https://portal.ecivis.com/#/peerBudget/5137F3D8-F4A1-4023-ABCE-3A481417E903

Application Goals :

View Application Goals : https://portal.ecivis.com/#/peerGoals/C9A0BB4D-FDE7-42A2-A2E2-74973A94F50D

Created by : zengine+36768@srm.ecivis.com

Record ID # : 50592291

Last change : 2023-05-16T21:16:30+0000

Grant Award Budget For:

FY 2023 Water Conservation Grant Fund (WCGF)

WATER INFRASTRUCTURE FINANCE AUTHORITY OF ARIZONA

Project Name:

Budget Items

Category	Title	Units	Unit Cost	Extended Cost	Direct Cost	Indirect Cost	Cost Share
Personnel							
	Personnel	0	$0.00	$0.00	$0.00	$0.00	$0.00
Personnel Total		**0**	**$0.00**	**$0.00**	**$0.00**	**$0.00**	**$0.00**
Fringe Benefits							
	Fringe Benefits	0	$0.00	$0.00	$0.00	$0.00	$0.00
Fringe Benefits Total		**0**	**$0.00**	**$0.00**	**$0.00**	**$0.00**	**$0.00**
Travel							
	Travel	0	$0.00	$0.00	$0.00	$0.00	$0.00
Travel Total		**0**	**$0.00**	**$0.00**	**$0.00**	**$0.00**	**$0.00**
Equipment							
	Equipment	0	$0.00	$0.00	$0.00	$0.00	$0.00
Equipment Total		**0**	**$0.00**	**$0.00**	**$0.00**	**$0.00**	**$0.00**
Supplies							
	Supplies	0	$0.00	$0.00	$0.00	$0.00	$0.00
Supplies Total		**0**	**$0.00**	**$0.00**	**$0.00**	**$0.00**	**$0.00**
Contractual							
	Contractual	0	$0.00	$0.00	$0.00	$0.00	$0.00
Contractual Total		**0**	**$0.00**	**$0.00**	**$0.00**	**$0.00**	**$0.00**
Construction							
	Construction	0	$0.00	$0.00	$0.00	$0.00	$0.00
Construction Total		**0**	**$0.00**	**$0.00**	**$0.00**	**$0.00**	**$0.00**
Indirect Costs							
	Indirect Cost	0	$0.00	$0.00	$0.00	$0.00	$0.00
Indirect Costs Total		**0**	**$0.00**	**$0.00**	**$0.00**	**$0.00**	**$0.00**
Other							
	Reimbursement Payments to Water Customers Max	8	Varies	$0.00	$7,000.00	$0.00	$56,000.00
	Reimbursement Payments to Water Customers Medium	6.5	Varies	$0.00	$5,000.00	$0.00	$32,500.00
	Reimbursement Payments to Water Customers Minimum	4	Varies	$0.00	$1,000.00	$0.00	$4,000.00
Other Total		**0**	**$0.00**	**$0.00**	**$0.00**	**$0.00**	**$92,500.00**

Water Conservation Grant Fund Application Evaluation
Round 1

City of Goodyear – Commercial, Institutional, Industrial, and HOA Lawn Removal Incentive	**WC1-019-2023**
Grant Amount	$74,000.00
Category	Turf Removal
Summary	The conservation activity includes sending money to locations in Goodyear Water service area classified as commercial, institutional, industrial, or HOA that remove lawn on their property and replace it with a non-lawn alternative. The water customer must remove at least 1,500 square feet of lawn to qualify. The incentive amount is based on 20% of the total project cost up to $7,000. The Applicant stated that this method reduces staff time for field measurements and provides flexibility for customer options. To qualify, an entity must be a non-residential water customer in the Goodyear Water Service area. (E.g., Church, School, HOA, Business). Goodyear Water Conservation staff will work to guide the customer through the process including digitally measuring areas that will be removed for acreage tracking, ensuring plant coverage where appropriate, assisting with timeline or phasing of the project, and coordinating payment.
Location	City of Goodyear, Maricopa County
Estimated water savings in acre-feet per year	40
Duration of project/program	Applicant stated "*expected duration of the lawn removal incentive is until funds are depleted*" but also noted they believe they could remove 20-32 acres of lawn through the end of 2026. Applicant expects conservation benefits to continue well into the future.

Conservation Activity Benefits and Results

Statutory Evaluation Criteria #1, #2, and #4

Activity Type	Programs and projects that reduce water use Per A.R.S. 49-1332(B)(2)
Source of water	Colorado River water and Groundwater
Community information	The city of Goodyear as a whole is about 105,000 residents. About 63,000 of those are within the Goodyear Water Service area while the remainder reside in areas served by private water companies. The incentive would apply to any non-residential water customer in the Goodyear Water Service area. The greatest impact would be primarily in HOAs with large quantities of lawn square footage. These communities are generally most motivated to reduce water consumption and water bills, and Goodyear Water Conservation.

Water Conservation Grant Fund Application Evaluation
Round 1

Costs and benefits of project/program	The costs include labor and materials needed to remove lawn and install a non-lawn alternative. Potential environmental impacts include additional material sourcing for new irrigation systems, mulch, plants, etc. The benefits include permanently reduced water and maintenance demand on an area of landscape. Increasing desert plant coverages also improves overall tree canopy within the city and the region, as well as provides better resources for beneficial wildlife than lawn.

Funding Sources
Statutory Evaluation Criteria #3 and #5

Eligibility for LTWAF or WSDF	Applicant claims this conservation activity is not eligible for funding under the LTWAF or WSDF. Goodyear is not eligible for the WSDF. While Goodyear is an eligible entity for the LTWAF it is not clear whether it would be a practical method of funding these activities.
Leverage of multiple funds	The City plans to use internal funds for the match, no other external funding sources are being considered.
Source of funding and match	$18,500.00 in cash will be provided as match from the Goodyear Water budgeted funds

Capacity, Feasibility, & Public Comment
Statutory Evaluation Criteria #6, #7, and #8

Qualifications and capacity of applicant	Main program manager: Andrew Pirrone, Goodyear Water Conservation Coordinator for city of Goodyear. Andrew has worked in Arizona Water Conservation for the last 8 years, including 6 years with Gilbert as a Program Specialist, and 2+ years with Goodyears as a Program Coordinator. All the current conservation programs are administered or run by Andrew and his Conservation team members. These programs include an in-person home water audit program, a free rain sensor program, a free home conservation kit program, free water and landscape workshops, and free smart controllers.
Feasibility of project/program	There is already an active pilot program in place with internal processes and buy-in, however only a small number of projects can be completed with the Applicant's existing funds. The city plans to utilize the additional funds to more strongly market this program and increase the speed and number of lawn removal projects that are converted. The additional funding will further the opportunity for water customers to participate before funds run out. With the city's current available funds, only 5-6 projects can be completed.

Water Conservation Grant Fund Application Evaluation
Round 1

Public comments	This strategy to save water was identified as one of the priorities promoted by the Goodyear Water Conservation Committee and has been well received so far through the pilot program with individual customers.

Technical Review:

The Applicant **has a current SAM.GOV UEI #** which allows them to apply for federal funds.

The applicant has completed all steps in the grant application process and is requesting funding for a project / program that is acceptable under the regulations. The City's lawn removal program facilitates programs and projects that reduce water use Per A.R.S. 49-1332(B)(2).

Expenditure Code 5.8 Clean Water: Water Conservation

ARPA Final Rule (31 CFR Part 35 RIN 1505–AC77) defines water infrastructure projects as "eligible projects under the Clean Water State Revolving Fund." "A project shall meet the criteria of CWSRF eligibility found in Section 603(c) of the Clean Water Act (CWA)". Specific Expenditure Codes were created to define activities available under the water infrastructure category.

The Interagency Service Agreement (ISA-ARPA-WIFA-070122-01) between the State of Arizona, Office of the Governor and WIFA required the project / program be specific to Expenditure Code 5.8 Clean Water: Water Conservation.

WIFA staff find this project / program is consistent with Expenditure Code 5.8 Clean Water: Water Conservation as determined in Section 603c of the Clean Water Act (CWA) and the ISA.

Attachments:

- Goodyear, City of - WC1-019-2023 – Application
- Budget

Evaluation Criteria Statutory Reference:

49-1334. **<u>Evaluation criteria for water conservation programs and projects from the water conservation grant fund; procedures</u>**

The authority shall determine the order and priority of water conservation programs and projects proposed to be funded in whole or in part with monies from the water conservation grant fund based on the following, as applicable:

1. The extent to which the water conservation program or project achieves one or more of the results prescribed by section 49-1332, subsection A.
2. The costs and benefits of the water conservation program or project, including environmental costs and benefits.
3. If the water conservation program or project is eligible for funding from the long-term water augmentation fund established by section 49-1302 or the water supply development revolving fund established by section 49-1271 and if the nature of the water conservation program or project makes funding from the long-term water augmentation fund or the water supply development revolving fund impractical.
4. The ability to provide multiple benefits.
5. The degree to which the water conservation program or project will maximize or leverage multiple available funding sources, including federal funding.
6. The qualifications and capacity of an applicant.
7. The feasibility of the water conservation program or project.
8. Public comments.

WCGF Committee Evaluation:

☐ Recommend Rejection of Grant Application

☐ Recommend Approval of Grant Application

☐ Recommend Approval of Grant Application with Modifications

Tab 7

AGENDA ITEM:

Recommend Approval of Grant Application WC1-037-2023 – City of Phoenix – WCGF – $3,000,000

ACTION REQUIRED:

Review, Discuss & Recommend Approval

PREVIOUS ACTION:

None

STAFF CONTACT:

Lindsey Jones

RECOMMENDED DISCUSSION TIME:

5 Minutes

ATTACHMENTS:

- Grant Application WC1-037-2023 – City of Phoenix
- Water Conservation Grant Fund Evaluation

STAFF COMMENTS:

None

Commercial and Residential Turf Conversion Rebates

Profile : erin.andres@phoenix.gov

Entity Name: : City of Phoenix, Water Services Department

I. General Information

1. Title of Project: : Commercial and Residential Turf Conversion Rebates

2.Type of Conservation Activity (A.R.S. § 49-1332(B)): : Programs and projects that reduce water use Per A.R.S. 49-1332(B)(2)

Note: for the purpose of the application, the term project and program will be referred to as “conservation activity”

3. Is this for an individual Water Conservation Project or a general Water Conservation Program? : Water Conservation Programm

Please describe the specific components that make it a program. : There will be multiple deliverables over a longer period of time.

4. What is the location of conservation activity?

City: : Phoenix

County: : Maricopa

Program/Project Congressional District (check all that apply) :

1

3

4

8

Program/Project Legislative District (check all that apply) :

2

3

8

11

12

22

24

26

27

28

Watershed : This conservation activity will occur in the City of Phoenix, which covers the Middle Gila Watershed (Lower Salt sub watershed, Agua Fria sub watershed, and the Middle Gila sub watershed).

Active Management Area (if applicable): : Phoenix AMA

Irrigation Non-Expansion area (if applicable): : N/A

5.Conservation Activity Cost

Amount requested from the WCGF for this activity: : $3,000,000.00

Amount of matching funds: : $2,500,000.00

Total conservation activity cost: : $5,500,000.00

When applying for the grant, note that a single water conservation program grant may not exceed $3,000,000. A single water conservation project grant may not exceed $250,000. The WCGF requires at least a twenty-five percent match for each water conservation program or project.

6. What is the estimated water savings in acre-feet per year? : 115

Explain calculation: : The estimated water savings is 115 acre-feet per year or 1,151 acre-feet over the lifetime of the program conversions. The City of Phoenix used a study by Southern Nevada Water Authority (2005) to determine water savings, which found 55.8 gallons per square foot per year was conserved by converting turf to xeriscape. The City of Phoenix bases its calculations on an estimated 1.5 million square feet converted over a 10 year lifetime with a conservative estimate of 50 gallons per square per year conserved that aligns with more municipalities in the region.

7. What is the expected duration of the conservation activity? : Two years

II. Conservation Activity Benefits and Results

8. What is the water conservation activity you propose to fund with grant monies? Describe in detail. : The City of Phoenix proposes implementing a Turf Conversion Rebate program serving both commercial businesses and residential households to remove turf grass in their landscape and replace it with xeriscape. The initial rebate amount given will be $2/square foot. This program will have long-term savings in water demand, as the average water

savings for converting turf area to a landscape of low water use plants increases each year following conversion, saving on average, 50 gallons per square foot per year, leading to measurable water conservation with the potential to save an estimated 75 million gallons of water per year. The program will run until funds are depleted or the grant period expires, whichever comes first.

9. What is the source of the water that will be conserved? If it is mainstem Colorado River water or Colorado River water delivered through the Central Arizona Project, please clearly indicate so. : The source of the water that will be conserved could come from any part of the City of Phoenix's water supply portfolio. This includes the Colorado River (Central Arizona Project), the Salt and Verde Rivers (SRP), and groundwater from the Phoenix Active Management Area.

10. Describe the community (population size, demographics, principal economic activities, etc.) impacted by the conserved water. : The City of Phoenix has a population of 1.6 million people approximately 41 % White, 7.3% Black or African American, 2.1% Native American, and 42% Hispanic or Latino. The median household income is $64,927 with a 15% rate of persons in poverty. Phoenix serves an average of 2 people per household. Phoenix is home to a large number of high-tech, IT, renewable energy and bioscience industries. The city's economic base also includes a viable financial and advanced business services enterprises as well as a robust health sciences sector. All of these households and businesses would benefit from increased water savings with long term impacts to the city’s water supply from reductions in demand. Reductions of discretionary residential outdoor water use and water waste (leaks, irrigation inefficiencies, etc) can lower a resident’s water bill and can also have a positive impact upon the entire region. At a large scale, when water inefficiency is reduced, Phoenix’s water supply portfolio would benefit from reduced demand. Demand reductions increase our ability to adapt to variable supply conditions and regional climatic shifts like aridification.

11. What is the extent to which your water conservation activity achieves one or more of the following (select all that apply): :

value1

value2

value3

Describe: : • Long-term reductions in water use Turf removal programs have long been established as leading to significant long-term water savings. The average water savings for converting turf area to a landscape of low water use species in conjunction with drip irrigation incrementally increases each year following conversion, saving on average more than 50 gallons a square foot (Southern Nevada Water Authority, 2005), for a total of 115 acre-feet per year of the turf conversions. As the average Phoenix household uses up to 70% of its water outdoors and the landscape changes are permanent, this is a substantial savings in long term reductions. • Improvements in water use efficiency. Converting turf to low water use plants reduces the use of water necessary for irrigation, thereby increasing water efficiency. Drip irrigation systems typically replace sprinkler systems used for grass, greatly improving efficiency, or irrigation is eliminated entirely by planting native species that can survive on the region’s rainfall. • Improvements in water reliability By reducing outdoor water use, the turf conversion rebate program increases the city’s supply of water, leading to permanent increased reliability in deliveries over time.

12. What is the extent to which your water conservation activity addresses one of more of the following: :

Water supply shortages

Reliance on non-renewable water supplies

Groundwater depletion

Water quality issues

Natural disasters that may impact water supply infrastructure

Describe: : • Water supply shortages By conserving water, the turf conversion rebate program increases the city's supply of water, furthering its ability to handle times of shortages. • Reliance on non-renewable water supplies By conserving renewable supplies of water, the turf conversion rebate program increases the city's supply of such water, thereby reducing the need for non-renewable supplies. • Groundwater depletion By conserving renewable supplies of water, the turf conversion increases the city's supply of such water, thereby reducing the need for non-renewable supplies, leaving groundwater in the ground. • Water quality issues As all water used for irrigation is potable water, meeting current drinking water standards, regardless of what type of plant is used in the landscape, it is thought the turf conversion rebate program will have little effect on water quality issues. The main benefit will be in water quantity. • Natural disasters that may impact water supply infrastructure As a turf conversion program does not constitute water supply infrastructure, it is thought the turf conversion rebate program will have little effect on natural disasters. The main benefit will be in water savings.

13. How will your water conservation activity align with a local, regional, or statewide water plan or integrated resource management plan? : The turf conversion rebate program aligns with the long-term efficiency improvements set out in the City's water resource plan. It also aligns with ADWR's Fifth Management Plan to conserve and manage groundwater resources in the Phoenix AMA. It is also fully supported by the mayor and city council.

14. What are the costs and benefits of your water conservation activity, including any environmental impacts? : The clear benefit of the turf conversion rebate program is the acre-feet of water saved, resulting in long term reductions in water use. We estimate this amount to be 230 acre-feet over the course of the program or 1,151 acre-feet of lifetime reductions. The program also will reduce the use of fertilizer used in landscapes, greatly benefitting the environment. The costs amount to the staff time to process the applications and issue the rebates and the actual dollar amount of the rebates themselves. The turf removal rebate program will directly support the goals of efficient and responsible water use which are covered in the following plans: The Phoenix Active Management Area, Fifth Management Plan- the 1980 Groundwater Management Act of the State of Arizona; the City of Phoenix Water Resources Plan; the City of Phoenix Drought Management Plan and Water Use Reduction Guidelines; the Phoenix City Council's 2019 Final Report from the Water Conservation Ad Hoc Committee.

15. How will you measure the effectiveness of the conservation activity? : The square footage of turf converted will be tracked by program staff to determine effectiveness. Each landscape conversion will be pre- and post-inspected for adherence to the program guidelines. For each new landscape project, the quantity of gallons saved will be determined by square footage converted to measure overall program effectiveness in conserving water.

III. Funding Sources

16. If your water conservation activity is eligible for funding from WIFA's Long-Term Water Augmentation Fund or Water Supply Development Fund, does the nature of your conservation activity make funding from those funds impractical, and why? : The turf conversion rebate program is not eligible for funding from WIFA's Long-Term Water Augmentation Fund or Water Supply Development Fund.

17. Would the conservation activity be otherwise implemented without this grant funding? Explain. : Yes, the turf conversion rebate program would be implemented without the WIFA grant as it is fully supported by the mayor and city council, however it would be implemented at a much-reduced amount than as described in this document.

18. To what extent will your water conservation activity maximize or leverage multiple available funding sources, including federal funding? : It is the intent of the City of Phoenix to apply for Bureau of Reclamation funds to maximize the dollar amount that can contribute to the program and increase the water savings. No other funding source will be sought by the city.

19. Are there cost-sharing opportunities with other applicants or other parties? Explain. : The city has not identified any cost sharing opportunities as of the time of this application.

20. What is the source and amount of the match (including in-kind match)? : The Phoenix Water Services Department will be the source of any matching funds, exceeding the match requirement of 25% in the amount of approximately 2.5 million dollars.

IV. Capacity, Feasibility, & Public Comment

21. What qualifications and capacity do you have for completing your proposed water conservation activity? Include any past managerial deficiencies and provide the name(s) and qualifications of the individual(s) or entities who will be managing this activity. : The Conservation Team at the City of Phoenix is comprised of 5 Water Resource Specialists and a Water Conservation Project Manager. The specific focus of managing the rebate program will be Water Resource Specialist Amy Garcia. The other 4 Water Resource Specialists will be brought in as needed to assist her: Elijah Tangenberg assisting in commercial rebates, Aaron Boydston who will be providing quantification of water savings, Ginny Svec and Emilie Brown will be providing outreach and promotion of the program and Water Conservation Project Manager Christian Delgado will be assisting in HOA rebates. All water conservation staff have at least a bachelor’s degree and 3 of the 6 have master’s degrees with a fourth working on hers. The city also anticipates hiring two additional staff to assist with processing the rebates.

22. Will there be significant management impacts as the result of the proposed conservation activity, or any technology associated with the conservation activity? (For example: additional costs or staffing requirements) : The city does anticipate hiring two additional staff to assist with processing the rebates. The city has already spent significant time with internal IT systems to get them ready to process the rebates. No other impacts are anticipated.

23. Will the proposed conservation activity promote collaborative partnerships to address water-related issues? Explain. : While not directly promoting partnerships with others, the program often leads to cross promotion of other cities conservation rebates as requests come in from non-residents seeking the rebates. The conservation team directs those people to their own city’s rebate programs, and vice versa when other cities receive requests for Phoenix residents.

24. What is the stakeholder involvement in the conservation activity planning process? : The turf conversion rebate program is a direct result of a request from the mayor as part of the southwest cities agreement made in 2022 to further leverage conservation programs in the municipal sector. City council will be briefed on the turf conversion rebate program in a policy session later this June 2023.

25. Will the proposed conservation activity include public outreach and opportunities for the public to learn about the conservation activity? Explain. : The city will be promoting the program through various media (social, website, press releases) and will be featured over the course of the year at community events, giving the public ample opportunity to learn about the program.

26. Is there community and/or sector support for the conservation activity? Explain. : As indicated by residents who have expressed interest, the program is anticipated to have high interest and support by the community of residents and businesses.

27. How feasible is it to complete your water conservation activity? Explain. : With ample staff and resources available to the program, the city anticipates relative ease in operating the program. Much will depend on demand, but the city is prepared to meet that demand.

28. If the conservation activity is a continuation of ongoing activities, has the activity been shown to be effective? If a new activity, has the proposed project, technology, or technique previously been implemented? : The turf conversion rebate program is an entirely new program to the City of Phoenix and has not been implemented previously.

29. Will the proposed conservation activity implement an established Best Management Practice? Explain. : Turf conversion rebates are an established Best Management Practice as outlined by ADWR in the Fourth Management Plan and as required for large users under the Non-Per Capita Conservation Program.

Additional Supporting Documentation (pdf, jpg, word, excel) :

Additional Supporting Documentation (pdf, jpg, word, excel) :

Additional Supporting Documentation (pdf, jpg, word, excel) :

Additional Supporting Documentation (pdf, jpg, word, excel) :

Additional Supporting Documentation (pdf, jpg, word, excel) :

Average Score :

# of Reviews : 0

# of Denials : 0

Please use the following link to view the Budget

Budget Worksheet :

View Budget Worksheet : https://portal.ecivis.com/#/peerBudget/8C41C699-7602-4F3B-B553-EB9D12C2A661

Application Goals :

View Application Goals : https://portal.ecivis.com/#/peerGoals/F40888A9-1D1C-47B7-BCEC-17B11464354C

Created by : zengine+36768@srm.ecivis.com

Record ID # : 50694210

Last change : 2023-05-18T22:11:49+0000

Application Budget for City of Phoenix, Water Services Department

Program: Water Conservation Grant Fund (WCGF)
Project name: Commercial and Residential Turf Conversion Rebates

Budget Stage:

Pre-Award

Actions

Budget Summary

Total Direct Costs	$3,479,897.60
Total Indirect Costs	$0.00
Total Amount (Direct + Indirect)	$3,479,897.60
Match / Cost Share	$479,897.60

$0.00

Program Income

Budget Settings

Budget Items

	Ext Cost	Direct Cost	Ind Cost	Cost Share
1. Personnel	$256,672.00	$256,672.00	$0.00	$256,672.00
2. Fringe Benefits	$223,225.60	$223,225.60	$0.00	$223,225.60
3. Travel	$0.00	$0.00	$0.00	$0.00

4. Equipment

$0.00

$0.00

$0.00

Ext Cost **Direct Cost** **Ind Cost** **Cost Share**

$0.00

5. Supplies

$0.00

$0.00

$0.00

Ext Cost **Direct Cost** **Ind Cost** **Cost Share**

$0.00

6. Contractual

$0.00

$0.00

$0.00

Ext Cost **Direct Cost** **Ind Cost** **Cost Share**

$0.00

7. Construction

$0.00

$0.00

$0.00

Ext Cost **Direct Cost** **Ind Cost** **Cost Share**

$0.00

8. Indirect Costs

$0.00

$0.00

$0.00

Ext Cost **Direct Cost** **Ind Cost** **Cost Share**

$0.00

9. Other

$3,000,000.00

$3,000,000.00

$0.00

$0.00

Other

Program Income

Income

1. Program Income

$0.00

Budget Narrative

H1 H2 H3 B I U

The City of Phoenix will be hiring two staff in addition to one dedicated current staff member to run the rebate programs. Anticipated staff time for all 3 staff over the course of 2 years for the turf rebate is estimated to be 8,320 hours at a cost of $479,814. The turf rebates will be distributed by square foot converted at a cost of $2 per square foot. We estimate we will convert approximately 1.5 million square feet over the 2 years for a total of $3 million.

7532 characters remaining

Water Conservation Grant Fund Application Evaluation
Round 1

City of Phoenix – Commercial and Residential Turf Conversion Rebates	**WC1-037-2023**
Grant Amount	$3,000,000.00
Category	Turf Removal
Summary	The City of Phoenix proposes implementing a Turf Conversion Rebate program serving both commercial businesses and residential households to remove turf grass in their landscape and replace it with xeriscape. The initial rebate amount given will be $2/square foot. This program will have long-term savings in water demand, as the average water savings for converting turf area to a landscape of low water use plants increases each year. The program will run until funds are depleted or the grant period expires, whichever comes first.
Location	City of Phoenix, Maricopa County
Estimated water savings in acre-feet per year	115
Duration of project/program	Two years for implementation Applicant expects conservation benefits to continue well into the future.

Conservation Activity Benefits and Results

Statutory Evaluation Criteria #1, #2, and #4

Activity Type	Programs and projects that reduce water use Per A.R.S. 49-1332(B)(2)
Source of water	Colorado River (Central Arizona Project), the Salt and Verde Rivers (SRP), and groundwater from the Phoenix Active Management Area
Community information	The City of Phoenix has a population of 1.6 million people approximately 41 % White, 7.3% Black or African American, 2.1% Native American, and 42% Hispanic or Latino. The median household income is $64,927 with a 15% rate of persons in poverty. Phoenix is home to many high-tech, IT, renewable energy, and bioscience industries as well as a robust health sciences sector. Reductions of discretionary residential outdoor water use and water waste (leaks, irrigation inefficiencies, etc.) can lower a resident's water bill and can also have a positive impact upon the entire region.
Costs and benefits of project/program	The applicant stated the benefits are the acre-feet of water saved, reduction of fertilizers used in landscapes, and reduction of PFAS from turf grass in groundwater.

Water Conservation Grant Fund Application Evaluation
Round 1

Funding Sources
Statutory Evaluation Criteria #3 and #5

Eligibility for LTWAF or WSDF	The applicant states turf conversion rebate program is not eligible for funding from WIFA's Long-Term Water Augmentation Fund or Water Supply Development Fund. No other justification was provided for why the LTWAF or WSDF would be impractical options for funding this project.
Leverage of multiple funds	The City intends to apply for Bureau of Reclamation funds as well.
Source of funding and match	$2,500,000 - Cash and In-Kind Match The Phoenix Water Services Department will be the source of any matching funds, exceeding the match requirement of 25% in the amount of approximately 2.5 million dollars.

Capacity, Feasibility, & Public Comment
Statutory Evaluation Criteria #6, #7, and #8

Qualifications and capacity of applicant	Applicant listed the following qualifications: • Amy Garcia: The specific focus of managing the rebate program will be Water Resource Specialist • Elijah Tangenberg assisting in commercial rebates, • Aaron Boydston who will be providing quantification of water savings, • Ginny Svec and Emilie Brown will be providing outreach and promotion of the program and Water Conservation Project Manager • Christian Delgado will be assisting in HOA rebates. All water conservation staff have at least a bachelor's degree and 3 of the 6 have master's degrees with a fourth working on hers. The city also anticipates hiring two additional staff to assist with processing the rebates.
Feasibility of project/program	With ample staff and resources available to the program, the city anticipates relative ease in operating the program. Much will depend on demand, but the city is prepared to meet that demand.
Public comments	The City of Phoenix indicated by residents who have expressed interest, the program is anticipated to have high interest and support by the community of residents and businesses.

Water Conservation Grant Fund Application Evaluation
Round 1

Technical Review:

The Applicants **has a current SAM.GOV UEI #** which allows them to apply for federal funds.

The applicant has completed all steps in the grant application process and is requesting funding for a project / program that is acceptable under the regulations. The turf conversion rebates will help to improve water savings & quality as well as assist Phoenix residents who may not be able to afford.

Expenditure Code 5.8 Clean Water: Water Conservation

ARPA Final Rule (31 CFR Part 35 RIN 1505–AC77) defines water infrastructure projects as "eligible projects under the Clean Water State Revolving Fund." "A project shall meet the criteria of CWSRF eligibility found in Section 603(c) of the Clean Water Act (CWA)". Specific Expenditure Codes were created to define activities available under the water infrastructure category.

The Interagency Service Agreement (ISA-ARPA-WIFA-070122-01) between the State of Arizona, Office of the Governor and WIFA required the project / program be specific to Expenditure Code 5.8 Clean Water: Water Conservation.

WIFA staff find this project / program is consistent with Expenditure Code 5.8 Clean Water: Water Conservation as determined in Section 603c of the Clean Water Act (CWA) and the ISA.

Attachments:

- City of Phoenix Application – WC1-037-2023
- Budget

Evaluation Criteria Statutory Reference:

49-1334. **<u>Evaluation criteria for water conservation programs and projects from the water conservation grant fund; procedures</u>**

The authority shall determine the order and priority of water conservation programs and projects proposed to be funded in whole or in part with monies from the water conservation grant fund based on the following, as applicable:

1. The extent to which the water conservation program or project achieves one or more of the results prescribed by section 49-1332, subsection A.
2. The costs and benefits of the water conservation program or project, including environmental costs and benefits.
3. If the water conservation program or project is eligible for funding from the long-term water augmentation fund established by section 49-1302 or the water supply development revolving fund established by section 49-1271 and if the nature of the water conservation program or project makes funding from the long-term water augmentation fund or the water supply development revolving fund impractical.
4. The ability to provide multiple benefits.
5. The degree to which the water conservation program or project will maximize or leverage multiple available funding sources, including federal funding.
6. The qualifications and capacity of an applicant.
7. The feasibility of the water conservation program or project.
8. Public comments.

WCGF Committee Evaluation:

☐ Recommend Rejection of Grant Application

☐ Recommend Approval of Grant Application

☐ Recommend Approval of Grant Application with Modifications

Tab 8

AGENDA ITEM:

Recommend Approval of Grant Application WC1-039-2023 – Pima County – WCGF – $2,054,017

ACTION REQUIRED:

Review, Discuss & Recommend Approval

PREVIOUS ACTION:

None

STAFF CONTACT:

Lindsey Jones

RECOMMENDED DISCUSSION TIME:

5 Minutes

ATTACHMENTS:

- Grant Application WC1-039-2023 – Pima County
- Water Conservation Grant Fund Evaluation

STAFF COMMENTS:

None

Pima County Water Conservation Initiative: Efficient Fixture Replacement Program

Profile : amy.fish@pima.gov

Entity Name: : Pima County Facilities Management

I. General Information

1. Title of Project: : Pima County Water Conservation Initiative: Efficient Fixture Replacement Program

2.Type of Conservation Activity (A.R.S. § 49-1332(B)): : Programs or projects to reduce structural water overuse issues.

Note: for the purpose of the application, the term project and program will be referred to as “conservation activity”

3. Is this for an individual Water Conservation Project or a general Water Conservation Program? : Water Conservation Programm

Please describe the specific components that make it a program. : Pima County Facility Management’s proposes the Pima County Resilient with Water Initiative to provide immediate water savings from fixture replacement project while also creating a long-term water conservation program. This program will replace antiquated fixtures and start a series of assessment initiatives aimed at long-term, comprehensive water conservation. The assessments will be completed to Energy Star Facility Energy Management standards. Assessments consist of: identifying the onsite facilities team; establishing a usage baseline; creating an action plan for fixture replacement and identifying future conservation opportunities; and beginning the process to make each County facility Energy Star certified. The immediate reduction in water consumption and energy needs will substantially impact water supplies. A longer-term goal for this program is to use the experience gained and the infrastructure set up during this project as a steppingstone for future conservation efforts. For instance, the facilities management team, once trained and equipped for this project, will prioritize and implement further initiatives in the future. An example of a future conservation opportunity could be installing efficient cooling technologies, which could significantly reduce water usage in our arid environment. Another example is rainwater harvesting systems, which can collect and store rainwater for use in irrigation, toilet flushing, and other non-potable uses. This will not only conserve potable water but also help mitigate flooding issues.

4. What is the location of conservation activity?

City: : various municipalities and unincorporated areas

County: : Pima

Program/Project Congressional District (check all that apply) :

6

7

Program/Project Legislative District (check all that apply) :

16

17

18

19

20

21

23

Watershed : Lower Colorado River Basin Watershed

Active Management Area (if applicable): : Tucson Active Management Area

Irrigation Non-Expansion area (if applicable): : n/a

5.Conservation Activity Cost

Amount requested from the WCGF for this activity: : $2,054,017.00

Amount of matching funds: : $583,153.00

Total conservation activity cost: : $2,637,170.00

When applying for the grant, note that a single water conservation program grant may not exceed $3,000,000. A single water conservation project grant may not exceed $250,000. The WCGF requires at least a twenty-five percent match for each water conservation program or project.

6. What is the estimated water savings in acre-feet per year? : 18

Explain calculation: : Toilets: Existing: 3.0 gpf New: 1.2 gpf Reduction: 3.0 gpf - 1.2 gpf = 1.8 gpf Uses per day: 4 (low average) Days per year: 365 Water savings per toilet per year: 1.8 gpf * 4 uses/day * 365 days/year = 2,628 gallons Number of toilets replaced: 1725 Total water savings for toilets: 2,628 gallons/toilet * 1725 toilets = 4,532,500 gallons/year Urinals: Existing: 1.2 gpf New: 0 gpf (waterless) Reduction: 1.2 gpf - 0 gpf = 1.2 gpf Uses per day: 4 (average) Days per year: 365 Water savings per urinal per year: 1.2 gpf * 4 uses/day * 365 days/year = 1,752 gallons Number of urinals replaced: 674 Total water savings for urinals: 1,752 gallons/urinal * 674 urinals = 1,180,848 gallons/year Total water savings in gallons: 4,532,500 gallons/year (toilets) + 1,180,848 gallons/year (urinals) = 5,713,348 gallons/year Conversion to acre-feet: 5,713,348 gallons/year / 325,851 (gallons in an acre-foot) = ~17.53 acre-feet/year

7. What is the expected duration of the conservation activity? : Pima County Facilities Management proposes a comprehensive program to make every county facility more water efficient while also analyzing each facility for future efficiency improvements. This includes offices, libraries, parks, and service centers - each varying in size, usage and water needs. This program will replace old, inefficient toilet and urinal fixtures with newer, water-saving models. Given the sheer volume and variety of county sites, we estimate the implementation phase to require 5500 labor hours. Each installation will include site assessments, preparation, removal of old fixtures, and necessary adjustments to existing plumbing systems to install new fixtures. Time estimates incorporate the inevitable variability in existing plumbing details across different facilities, each with unique configurations and potential challenges. We anticipate the active implementation phase of the project to span over the course of two years. Benefits of the fixture replacement will extend beyond the implementation phase. The effects of the water-saving fixtures and the accompanying conservation practices are ongoing. Once installed, these fixtures will continue conserving water for their operational lifespan, potentially up to 20 years or more. Knowledge and experience gained by our team during site assessments will enable Pima County to identify additional future water and energy-saving opportunities for the next phases of this program.

II. Conservation Activity Benefits and Results

8. What is the water conservation activity you propose to fund with grant monies? Describe in detail. : Pima County proposes to use the grant funds to undertake a multi-phase water conservation initiative that focuses on three primary components: fixture replacement, facility assessments, and training of facilities management personnel. • Fixture Replacement: The heart of our proposed activity is the large-scale replacement of older, inefficient toilets, urinals, and sinks across all county facilities with more water-efficient models. We plan to replace 2,874 toilets, 1,036 urinals, and 2,460 sinks, which are currently using up to 3.0 gallons per flush (gpf) for toilets and 1.2 gpf for urinals. The new fixtures, which comply with EPA's WaterSense standards, will significantly reduce water consumption. The proposed toilets use a maximum of 1.28 gpf, urinals are waterless, and the sinks will be equipped with low-flow faucets. Due to small government cost saving measures there is no inventory of exactly how many toilets, urinals, and sinks are in any facility or in all County facilities combined. So we created an estimate using the maximum occupancy of each facility and the Pima County guidelines for restrooms and restroom fixtures per occupancy levels. See attached Pima County Fixture Estimate Document for estimation details. • System Assessments: Simultaneously, we will perform thorough assessments of current water usage systems at each facility location. This will involve a detailed audit of each facility's water usage, identifying areas of excessive water use, potential leaks, and opportunities for further water conservation measures. As part of these assessments, we will also evaluate opportunities for implementing water-saving technologies, such as rainwater collection systems and efficient cooling technologies. • Training of Facilities Management Personnel: During both the processes of installing the new fixtures and creating Energy Star facility assessments Pima County plumbing staff will gain continuous training. Staff will receive training in new bathroom fixture maintenance schedules and regimes. This new maintenance regimen is an industry best practice for water efficient fixtures. This regimen requires more maintenance instances but is proven to overall save time and save water by catching leaks sooner and preventing more leaks from starting. The Program Manager will also work with the installation teams to improve their Energy Star facility assessments in an iterative fashion to capture the right amount of detail and more and better future conservation opportunities. This on the job training will create important career development opportunities for the installation staff since Energy Star certification status is becoming a criteria for many new facility related jobs. Since this training occurs during the course of fixture replacement and facility assessment grant activities it is not called out as a separate line item in the budget. The proposed activities will achieve considerable water savings through fixture replacement and further augment these savings through increased maintenance. We estimate that the fixture replacement alone could save approximately 3 to 5 gallons of water per use, equating to substantial water savings when extrapolated across all county facilities and daily uses. Additionally, a key facet of our project involves conducting in-depth system assessments and focused training sessions. These are designed not only to ensure successful implementation of the current initiative but also to uncover additional potential avenues for water conservation. As we work on

replacing fixtures, we anticipate discovering further opportunities to reduce water consumption directly or indirectly through energy-saving measures or on-site supply implementations. This first phase will not act on the assessment results of further conservation opportunities but will propel this program into subsequent phases and continuous conservation achievements. Our holistic approach to water conservation underpins our dedication to optimizing water usage across all our facilities. This program underscores our commitment to environmental responsibility and sustainable water management practices. Through this initiative, we aim to preserve Pima County's status as a leader in water resources conservation and contribute towards a sustainable future for Pima County in anticipation of decreases in Colorado River allotments.

9. What is the source of the water that will be conserved? If it is mainstem Colorado River water or Colorado River water delivered through the Central Arizona Project, please clearly indicate so. : The primary source of water that our proposed water conservation activity aims to conserve is groundwater supplied by the Tucson Water utility. Tucson Water serves the majority of Pima County, including County facilities. This groundwater is replenished in part by Colorado River water delivered through the Central Arizona Project (CAP). The CAP is a 336-mile-long system of aqueducts, tunnels, pumping plants, and pipelines that brings water from the Colorado River to Central and Southern Arizona. This water is used to recharge the region's aquifers, supplementing the groundwater supply. By implementing water conservation measures in our facilities, we are effectively reducing the demand on local groundwater resources, which in turn reduces the reliance on CAP water to replenish it. While exact details are yet to be determined, all participating jurisdictions in the West are expected to have their Colorado River water allotments cut due to long-term drought and climate change. Reduced Colorado River water delivered through CAP will increase stresses on local groundwater resources. This will require more water efficiency to maintain sustainability of current water resources. The Pima County Resilient with Water Initiative plans to get ahead of impending water allotment reductions.

10. Describe the community (population size, demographics, principal economic activities, etc.) impacted by the conserved water. : Pima County is located in the south-central region of Arizona and is home to over one million residents, making it the second most populous county in the state. The county covers a large and diverse geographical area, stretching from the Mexico border in the south to the outskirts of Phoenix in the north. The county's largest city, Tucson, is a vibrant urban center with a population of around 550,000. However, the majority of Pima County's geographical area is rural. The demographics of Pima County are diverse, with a mix of ethnicities and cultures. The U.S. Census Bureau reports that as of 2021, the county was approximately 55% non-Hispanic white, 35% Hispanic or Latino, 4% African American, and 3% Native American, with the remainder being of other or mixed races. The economy of Pima County is broad-based and diverse, with principal economic activities spanning government, education, healthcare, tourism, and manufacturing. Pima County residents require about 83 gallons of water per capital daily, which is considered low consumption but is still ripe for reduction considering the current strains on local groundwater and Colorado River water. Pima County spent $3.829 Million purchasing water over the last year. By conserving water, we support the sustainability of these economic activities by ensuring the ongoing availability of this vital resource. Regardless of whether water used in cooling systems at the University of Arizona, water is served to patrons at local restaurants, or water is used to maintain the beautiful landscapes that attract tourists, every drop counts. Our proposed water conservation activities will ensure that our community can continue to thrive economically while protecting our precious water resources for future generations.

11. What is the extent to which your water conservation activity achieves one or more of the following (select all that apply): :

value1

value2

value3

Describe: : Our proposed water conservation activity is designed to achieve all three of these objectives: long-term reductions in water use, improvements in water use efficiency, and enhancements in water reliability. • By replacing outdated, high water usage fixtures with water-efficient models, we will significantly reduce our daily water consumption. For example, replacing a traditional 3.0 gallons per flush (gpf) toilet with a 1.28 gpf model can save up to 1.72 gallons of water per flush. Multiply that by the estimated average daily uses per fixture, and the savings quickly become substantial. Over time, these savings compound, leading to a significant long-term reduction in water use. • The fixtures we plan to install are not only designed to use less water but to use it more efficiently. For example, modern toilets and urinals are designed to maximize the cleaning power of the water they use, meaning they can achieve the same or better results with less water. Similarly, water-efficient sinks can deliver a comfortable, effective flow of water for handwashing while using significantly less water than traditional models. This is a clear example of improving water use efficiency. • By reducing our demand for water, we decrease the strain on our water supply, making it more reliable, especially during long-term droughts, heat waves which might affect power grids, or other disasters which could cause water shortages. Furthermore, by reducing our reliance on mainstem Colorado River water and the Central Arizona Project, we increase our resilience to potential disruptions in those supplies. Additionally, the types of expected upgrades such as cooling system improvements which will be implemented in subsequent phases due to assessments in this phase will further enhance our water reliability by diversifying our water sources and protecting our water infrastructure from damage.

12. What is the extent to which your water conservation activity addresses one of more of the following: :

Water supply shortages

Reliance on non-renewable water supplies

Groundwater depletion

Water quality issues

Natural disasters that may impact water supply infrastructure

Describe: : • Water supply shortages: By substantially reducing water consumption through the installation of water-efficient fixtures, we will alleviate pressures on our water supply and mitigate potential water shortages. The water we save with each toilet flush, urinal use, or faucet operation allows the same amount of water supply to serve a larger population or last longer in times of drought. In a desert environment like ours, where water scarcity is a known issue, this direct reduction in water use can play a pivotal role in preventing shortages. A good example of this are casinos in Las Vegas which have implemented significant water saving projects and touted their results publicly. • Reliance on non-renewable water supplies: Our initiative actively seeks to reduce our reliance on non-renewable water supplies, particularly water drawn from the Colorado River via the Central Arizona Project. By lowering our overall water demand, we decrease the necessity for these supplies, thus contributing to their conservation for future generations. We also expect that site assessments will lead to future opportunities such as rainwater collection systems. This renewable source of water could further decrease our reliance on non-renewable supplies, promoting a more sustainable system of conservation instead of individual conservation activities. • Groundwater depletion: Reducing our overall water consumption also eases the demand on local groundwater resources. This is particularly vital in our region, where groundwater supplies are under significant pressure. Impending water allotment decreases from Colorado River water will further strain current groundwater resources. Lowering our demand on this critical resource will contribute to its long-term sustainability, help prevent further depletion, and allow natural processes to replenish these aquifers over time. • Water quality issues: While our proposed activities don't directly address water quality issues, they indirectly contribute to maintaining water quality. Overstressed water systems can lead to a variety of water quality issues, including increased

concentration of pollutants and inadequate treatment. By reducing the strain on our water systems through our conservation efforts, we help to maintain the high quality of our water. • Natural disasters and water supply infrastructure: Our project enhances the resilience of our water supply infrastructure in the face of potential natural disasters. By lessening the demand on our water systems, we decrease the likelihood of system failures during events like floods, extreme droughts, or power brown/black outs caused by severe heat waves. Moreover, the proposed fixture upgrades and plumbing modifications will be carried out with the latest standards and best practices in mind, thereby ensuring our infrastructure is robust and capable of withstanding severe conditions.

13. How will your water conservation activity align with a local, regional, or statewide water plan or integrated resource management plan? : The proposed Pima County Resilient with Water Initiative directly aligns with the mission and objectives of the Water Infrastructure Finance Authority (WIFA) of Arizona. Both our short-term objectives and longer-term goals show our commitment to improving water quality, conserving water, and ensuring the reliable access to safe drinking water for our community. We seek to achieve this through a holistic, multidisciplinary approach, leveraging input and consultation from other county departments. The Pima County Office of Sustainability has been a longstanding advocate for environmental stewardship and the sustainable use of resources. Our project complements their mission by prospecting significant reductions in water usage in county facilities, thereby contributing to a more sustainable and resource-efficient community. Similarly, the Pima County Regional Flood Control District's directive to safeguard our community from the effects of flood damage align well with our project. By enacting a water conservation program and completing Energy Star facility assessments we are indirectly contributing to efforts to manage and reduce flood risks by including this risk management in facility assessments. This program also aligns with the objectives of the Pima County Regional Wastewater Reclamation Department (RWRD) and the Pima Association of Governments. The Pima County Resilient with Water Initiative supports RWRD's efforts to protect public health and the environment by providing effective wastewater management and the Pima Association of Governments' goal to develop a regional plan to address water quality. In addition to aligning with these local and regional plans, this program also aligns with the goals of the granting organization, WIFA. This program strives to address the critical issues that WIFA seeks to mitigate, including water conservation and the improvement of water infrastructure. Through the implementation of this project, we aim to make indirectly enhance the quality of life in Southern Arizona, maintaining and improving water quality, and conserving water to invest in our state's future.

14. What are the costs and benefits of your water conservation activity, including any environmental impacts? : The water conservation activity we propose has both direct and indirect costs and benefits, along with substantial positive environmental impacts. Costs: The primary cost for this program is the large upfront cost of purchasing and installing new bathroom fixtures. There will also be ongoing maintenance costs for the new fixtures. However, maintenance costs would exist regardless of whether we maintain new or old fixtures; and the maintenance costs should be partially offset by wasting less water in leaks. Benefits: This program has many benefits. We anticipate significant reduction in water usage, translating into cost savings on water bills for Pima County. This is not only beneficial from a financial standpoint but also aligns with the broader objectives of water conservation and sustainable resource management. Improved water efficiency can lead to energy savings, as less energy is needed to pump, heat, and treat water. These energy savings also result in lower greenhouse gas emissions, contributing to the broader goal of climate change mitigation. Standardized site assessments will identify more water and energy conservation opportunities to create a program of continuous improvement. It will help foster a culture of sustainability within the County's operations, serving as a model for other departments. It will also provide an opportunity for public outreach and education about water conservation, promoting community engagement and participation. The environmental impacts of this project are overwhelmingly positive. Water conservation reduces the pressure on local water sources, contributing to the sustainability of the region's water supply. This is particularly crucial for Pima County, which is located in an arid region with limited water resources. The continuous improvement from near term conservation and long-term improvements will create positive compounding effect on environmental resources in Southern Arizona. By reducing the demand for water the Pima

County Resilient with Water Initiative will indirectly support the health of local ecosystems which rely on the same water sources. This is beneficial for biodiversity and overall ecological health Moreover, the energy savings from reduced water pumping, heating, and treatment contribute to lower carbon emissions. This is a significant environmental benefit given the urgent need to reduce greenhouse gas emissions and mitigate the impacts of climate change. While there are significant upfront costs for this program, the financial, environmental, and societal benefits far outweigh them.

15. How will you measure the effectiveness of the conservation activity? : • Utility Bill Tracking: Continue using the EnergyCAP program to track all utility bills. Facilities Management currently tracks utility usage for every facility and each metered system like a streetlight. Tracking this level of detail will allow the program manager to measure large and small changes from the initial bathroom fixture replacement to future to-be-identified conservation implementations to show accurate conservation results. This will help Pima County monitor changes in energy consumption and costs over time. This will also become a tool for presenting future conservation opportunities to Pima County leadership for implementation. • Water Consumption Tracking: Monitor changes in water consumption at sites through billings. Keep track of any significant changes or reductions in water usage, which may be attributed to conservation activities implemented. • Facility Data Collection: Continue collecting monthly data on consumption at Pima County facilities. By comparing consumption data before and after implementing conservation measures, you can quantify the impact of your efforts and identify any areas of improvement. • On-Site Feedback: Encourage staff members to provide qualitative feedback regarding the conservation program. This can include reporting any issues, suggesting improvements, or sharing their satisfaction with the program. This feedback can serve as valuable insight into the effectiveness of the conservation activities and help identify areas for further optimization. • Employee Satisfaction Measurement: Implement surveys and other feedback mechanisms to measure employee satisfaction with the conservation program. This can qualitatively measure engagement and satisfaction levels, providing insights into the overall effectiveness and reception of the initiative. Higher employee satisfaction is often indicative of successful conservation efforts. Remember, engagement can also be measured through various metrics, such as employee participation in site assessments, creating request lists for new fixtures to show demand, and adoption of sustainable behaviors. Measuring participation in using new fixtures through partial building fixture installations is unnecessary since this has been done many times in multiple professional settings with consistent results that show employees preferentially use new more efficient fixtures. A close proxy to measure participation is to allow personnel to request priority status on their replacements, helping to guide installations so that the most motivated users -- likely the most concerned users — often get new fixtures first.

III. Funding Sources

16. If your water conservation activity is eligible for funding from WIFA's Long-Term Water Augmentation Fund or Water Supply Development Fund, does the nature of your conservation activity make funding from those funds impractical, and why? : Our water conservation initiative, while robust and impactful, primarily targets demand-side measures to alleviate supply pressures. The nature of our project makes it more suitable for funding through WIFA's Water Conservation Grant Fund, rather than the Long-Term Water Augmentation Fund or Water Supply Development Fund. The Long-Term Water Augmentation Fund (LTWAF) is designed to finance water supply development projects that directly increase water supplies for the state of Arizona. While we recognize the importance of augmenting water supply, our initiative is more concerned with maximizing the efficiency of current water use, reducing overall demand, and enhancing the longevity of our existing water resources. Our approach is more in line with the ethos of demand management as opposed to supply augmentation. Similarly, while the Water Supply Development Fund also plays a crucial role in securing Arizona's water future, it tends to emphasize projects that establish or expand water supplies. Our project, on the other hand, focuses on the judicious use of existing water supplies by mitigating wasteful practices and implementing efficient plumbing fixtures. Therefore, while the goals of the LTWAF and Water Supply Development Fund are commendable and necessary for Arizona's water future, the specific nature of our water conservation activity – which

focuses on demand reduction rather than supply increase – makes funding from those funds impractical for our project. Instead, we firmly believe that our project aligns seamlessly with the objectives of the Water Conservation Grant Fund, which prioritizes the reduction of water use and the improvement of water use efficiency.

17. Would the conservation activity be otherwise implemented without this grant funding? Explain. : While Pima County is deeply committed to water conservation and has made significant strides in environmental sustainability, the scale of the proposed Pima County Resilient with Water Initiative would be significantly constrained without this grant funding. The high upfront cost of replacing existing plumbing fixtures across such an extensive county network is substantial. Without grant funding, we would be limited to replacing fixtures on a much smaller scale, most likely prioritizing only those in dire need of replacement. This will significantly slow the pace of water conservation and reduce the overall impact of this program, and reducing or obscuring the overall conservation benefit of the program and possibly negatively affecting Pima County leadership buy in of next steps. Crucial in allowing us to implement a comprehensive approach, funding includes not only fixture replacement, but also a shift in maintenance protocols and a commitment to water conservation programming across our sites, and the ability to take time and focus on these issues while developing new solutions and installing new fixtures. Changing maintenance routines to more frequently, but less rigorous activities is a well-established best practice which has been shown to both save maintenance labor and water. Without the grant, we would likely be able to address only one aspect of this multifaceted approach. This limited piecemeal approach would likely yield limited positive results which could dissuade leadership from undertaking the remaining short and longer-term activities in this program. Funding provides us with the ability to leverage additional funds for water conservation. The commitment from WIFA would send a strong signal to other potential funding sources, such as the Department of Energy's Energy Efficiency Block Grant and other local, state, or federal programs, that our project is viable and worthy of investment. Without the grant, securing additional funding would be significantly more difficult. While we would continue to pursue water conservation efforts to the best of our ability without this grant, the scope, speed, and overall impact of our efforts would be considerably diminished. The grant funding is therefore not just beneficial, but crucial for the full and effective implementation of our proposed water conservation activity.

18. To what extent will your water conservation activity maximize or leverage multiple available funding sources, including federal funding? : The Pima County Resilient with Water Initiative we propose is designed to leverage a diverse range of funding sources. This approach will create multiple opportunities for follow-on funding which will propel next steps such as implementing the additional conservation opportunities identified and scoped out during facility assessments under Water Conservation Grant Fund funding. This injection of funds will fuel our initial drive to replace outdated fixtures across Pima County facilities and begin the Energy Start certification process which will create a process for continuous conservation improvements across Pima County. Pima County is currently planning for future applications to the FEMA Building Resilient Infrastructure and Communities (BRIC) program. The water conservation measures proposed here align with BRIC's emphasis on infrastructure projects that increase a community's resilience to disasters. Our plan is to begin this program through fixture replacement and identification of future opportunities. Then, we will apply for BRIC funding to realize the next phases of this program we identify under the Water Conservation Grant Fund. We also plan to apply for the Department of Energy's Energy Efficiency Block Grant, a resource that can help us extend our conservation work into energy efficiency areas which directly impact water usage. By updating our cooling systems to more water-efficient models, we can achieve further reductions in water usage, thus optimizing the value of the grant. We are also committed to exploring other state and federal funding opportunities that match our water conservation goals. This includes initiatives related to water reclamation, rainwater collection systems, and flood protection measures. Each of these facet's dovetails with our fixture replacement program, deepening the impact of our overall water conservation initiative. Moreover, we see potential in public-private partnerships as a viable funding option. The results-driven nature of our water conservation project, buoyed by the commitment of WIFA, presents an appealing opportunity for private entities with a focus on environmental sustainability. Partnerships with Energy Service Companies like Ameresco and McKinstry, two multi-billion-dollar contractors,

which work with Pima county to further its energy goals, provide services, and long-term financing solutions. Pima County and these ESCOS use established master agreements and contracts to supply clean energy and technical and commissioning services for our facilities. These companies and others like them are competitive, massive, forward-thinking entities that seek to leverage their tax savings with public projects that meet their corporate stewardship values. In synthesizing these diverse funding sources, we not only secure the financial means to execute our water conservation activities, but also foster a collaborative approach among various stakeholders. Our plan is that this dynamic, multi-phased funding strategy will ensure that our conservation efforts remain both effective and sustainable.

19. Are there cost-sharing opportunities with other applicants or other parties? Explain. : Our project, as currently designed, does not directly involve cost-sharing opportunities with other applicants or parties. This initiative is a county-specific effort, driven by Pima County's Facilities Management department's mission to enhance water conservation within our own operations. While we always remain open to potential partnerships and collaborative efforts that could further enhance water conservation, at this time, we don't foresee the implementation of this project involving cost-sharing arrangements. However, we are actively pursuing multiple funding sources to maximize the project's reach and impact. Our focus remains on ensuring that the benefits of this project – reduced water use, cost savings, and environmental sustainability – are fully realized for the people of Pima County.

20. What is the source and amount of the match (including in-kind match)? : Pima County’s match commitment comes from the labor and associated fringe benefits to install new water conserving bathroom fixtures in all 360 County facilities. Our matching commitment comes from direct services to the grant, not in-kind contributions. Pima County meets its minimum match commitment ($513,504) by contributing $425,659 in fixture installation labor and $157,494 in associated fringe benefits, for a total of $583,153.

IV. Capacity, Feasibility, & Public Comment

21. What qualifications and capacity do you have for completing your proposed water conservation activity? Include any past managerial deficiencies and provide the name(s) and qualifications of the individual(s) or entities who will be managing this activity. : Pima County's Facilities Management department has extensive experience managing large-scale capital improvement projects across Pima County, including complex infrastructure upgrades and installations. Facilities is managing the Teatro Carmen restoration project which is a five-million-dollar project to restore a historic theater to become a cultural destination. The department completed a $220,000 EPA grant to construct a monitoring site for air quality data collection. The department also operates the January 8’th Memorial (Representative Gabby Giffords shooting) which combines sculpture, art, and gardens and was funded by grants, donations, and Pima County general funds. The Pima County Resilient with Water Initiative is led by Energy Program Manager Eric Wilson. Wilson has both a Bachelor of Science in Environmental Science and a Bachelor of Arts in Energy Policy and Management. Prior to joining Pima County, Wilson accumulated three years of experience managing solar construction projects, further deepening his understanding of sustainability and resource management. The program team will also include experienced plumbing personnel from the Facilities Management department, all of whom possess a broad range of skills, knowledge, and certifications in facilities operations and maintenance, project management, and environmental best practices. The Grants Management and Innovation Department within Pima County will support the award management activities, including developing subaward agreements, convening monthly implementation status meetings, and submitting financial reports. The Grants Management and Innovation Finance Division evaluates and processes all financial transactions including accounting entries, cash flow reporting, and expense monitoring, reimbursement requests, fiscal records, and audit assistance. The Finance Division also coordinates the County’s annual Single Audit process with the Arizona Office of the Auditor General. Pima County government reported a total of $138 million in federal awards in Fiscal Year 2021, had no audit findings, and was determined to be a low-risk auditee. Pima County uses CGI Advantage to track and manage all financial and budget activities.

22. Will there be significant management impacts as the result of the proposed conservation activity, or any technology associated with the conservation activity? (For example: additional costs or staffing requirements) : Updating toilets and urinals and evaluating associated facilities for future conservation opportunities will require significant management responsibilities, which is why a .75FTE Program Manager has been selected for this project. This water conservation project will not only involve the identification of locations and installation of water-efficient fixtures, coordination between procuring the new fixtures and the Pima County Facilities Management plumbing team, but also training staff to complete comprehensive facilities assessment, and compiling data and preparing reports to multiple internal and external partners. On each site visit for fixture replacement our team members will also perform a comprehensive site assessment. At each fixture replacement location project staff will identify and evaluate opportunities for further water savings, whether by improving existing systems, implementing new water-saving measures, or promoting water conserving best practices for County employees tailored for their specific workplace. Additionally, program staff will engage with facility employees to provide education about water conservation and elicit feedback to foster a culture of sustainability within the county's operations. This approach works toward continual water conservation improvements. This approach also tasks the Program Manager with conducting cost benefit analyses to measure and prioritize future conservation opportunities. This is not a burden on project capacity, but a feature which will further strengthen Pima County’s commitment to environmental stewardship. Water availability and use changes are coming for all jurisdictions in Arizona. While the exact reduction proportions and amounts have not been determined yet, Pima County leadership intends to stay at the forefront of water efficiency through this program.

23. Will the proposed conservation activity promote collaborative partnerships to address water-related issues? Explain. : This water conservation project is designed to benefit from existing water partnerships. Collaboration with Tucson Water and other local water related organizations is one of the cornerstones of this initiative. As we adopt water-saving fixtures across county facilities, we reinforce Tucson Water's mission of efficient water use and resource management. Tucson Water and Pima County meet regularly to coordinate water projects, solve local problems, and transfer best practices. Tucson Water will be part of a team of external partners which will participate in periodic status meetings for the Pima County Resilient with Water Initiative on which it will continue with its coordinating and advisory role. The project's alignment with different Pima County departments further underscores its collaborative essence. For instance, the water conservation goals for this program come from guidance and consultation with the Pima County Regional Wastewater Reclamation Department (RWRD). As we decrease water demand, we indirectly assist RWRD in managing and treating wastewater efficiently. The proposed conservation activity also has a strong public-facing aspect. Most Pima County facilities are open to the public. The public will use the restrooms in these facilities and see the fixture company provided stickers or Tucson Water provided QR codes which attest to the new fixture performance. We believe that this exposure to more efficient fixture performance will inspire the public to enact similar changes in their businesses and homes. The project, therefore, represents an important opportunity to build and strengthen collaborative partnerships. Through these partnerships, we can work together to create a more sustainable and water-conscious community in Pima County.

24. What is the stakeholder involvement in the conservation activity planning process? : The Pima County Water Conservation Action Group has been instrumental in shaping our plan. The Pima County Water Conservation Action Group consists of water utilities, academic partners, and municipal governments including the University of Arizona Water Research Center, City of Tucson, Metro Water District, Arizona State University Management Center for Water Policy, Central Arizona Project (CAP), Arizona Department of Water Resources, Bureau of Reclamation, Tohono O’Odham Nation, and other partners. This working group provided invaluable feedback and guidance to plan this program. Their consensus on the necessity and effectiveness of fixture replacements was a key factor in Pima County prioritizing this replacement project as we begin the longer process of Energy Star certification and associated site assessments. The Pima County Resilient with Water Initiative continues to include stakeholders by engaging facility managers and personnel at county buildings. These individuals are the direct users and beneficiaries of the new fixtures. Their insights on practical usage and potential issues are crucial for successful implementation. Regular site visits by our team will facilitate ongoing dialogue with these stakeholders, allowing us to

tailor solutions as necessary. In addition, we will also be involving the broader public as stakeholders in this project. Pima County conducted electronic vehicle station surveys at County libraries to gain pinpoint feedback which is helping the County set up strategically placed charging stations. This program will use similar surveys as well as informational placards from the water efficient fixture manufacturers to educate, inform, and elicit opinions from the public which will inform future conservation opportunity prioritization and implementation.

25. Will the proposed conservation activity include public outreach and opportunities for the public to learn about the conservation activity? Explain. : Yes, public outreach and education are integral parts of our water conservation project. As a county government, it's our responsibility not just to implement conservation measures, but also to engage with our community and spread awareness about the importance of water conservation. The visible nature of the fixture replacements in public buildings serves as a powerful, tangible demonstration of water conservation in action. Informational placards will be attached to the walls adjacent to each new fixture. This informational signage about the water savings associated with these fixtures will educate individuals on how they can adapt industrial conservation projects to their private homes or businesses to achieve water savings.

26. Is there community and/or sector support for the conservation activity? Explain. : There is significant community and sector support for the proposed conservation activity. The project aligns with the priorities of various local and regional entities that have demonstrated their commitment to water conservation and sustainability. Our initiative is backed by the Pima County Water Conservation Action Group, which comprises key stakeholders from various sectors of the county government, water utilities, and environmental organizations. This group has been instrumental in shaping our project, endorsing the focus on fixture replacements as a clear, effective, and broadly supported strategy for water conservation. We also have support from various county departments who understand the critical nature of water conservation in our region. These departments include the Office of Sustainability and Conservation, the Regional Wastewater Reclamation Department, and the Facilities Management, all of whom have expressed their commitment to our project and its goals. The wider Pima County community has shown consistent support for water conservation efforts. Residents and businesses have a high awareness of the importance of water conservation, given our location in a water-stressed region. This awareness has translated into broad support for practical, cost-effective conservation measures like the ones we are proposing. We intend that this project will continue to lead by example and inspire businesses and individuals to make similar upgrades.

27. How feasible is it to complete your water conservation activity? Explain. : Like many organizations during the pandemic, Pima County’s plumbing staff had a staffing shortage during 2021. However, staff levels are now approaching full and should be further invigorated by a County-wide pay initiative that offers substantial long-term job security and advancement opportunities. We plan for multiple installation teams to execute installations simultaneously. Additionally, as we learn more about the installations the Program Manager will coordinate installations to further optimize schedule and minimize bathroom closures for County employees and the public. Choosing a two-year implementation schedule instead of one year also creates room in the schedule for accommodating old plumbing configuration challenges and the day to day operational needs of facility staff. Thus, the program will be fully staffed from day one. We developed a plan with our partners from the Pima County Water Conservation Action Group to learn and optimize scheduling as we progress. We also built potential implementation changes into our schedule. We plan to include our water partners in periodic program status meetings to help speed the pace of implementing new best practices and mitigating programmatic issues as they arise.

28. If the conservation activity is a continuation of ongoing activities, has the activity been shown to be effective? If a new activity, has the proposed project, technology, or technique previously been implemented? : Replacing old toilets and urinals with new water efficient fixtures is not a continuation of ongoing activities but represents a new program within Pima County's broader sustainability mission. However, our proposed strategies, technologies, and techniques have a proven track record of effectiveness published both in academia and through industry literature. The installation of high-efficiency toilets, urinals, and sinks is a well-established water conservation practice. According to the Environmental Protection Agency (EPA),

replacing an old, inefficient toilet with a Water Sense-labeled model can reduce water use by 20 to 60 percent, saving around 13,000 gallons of water and $110 per year for the average family. With 7,000 employees and a large number of facilities, Pima County's water savings should be substantial. Furthermore, these high-efficiency fixtures are not experimental or untested; they have been successfully implemented in various settings, from residential homes to large public facilities, and have consistently delivered significant water savings. They also require no significant changes in user behavior, minimizing the barrier to adoption. Our project draws from these proven methods and applies them systematically across Pima County's facilities. By doing so, we anticipate substantial reductions in our water use, contributing to the region's water conservation goals and helping to ensure the sustainability of our water resources.

29. Will the proposed conservation activity implement an established Best Management Practice? Explain. : The proposed water conservation fixture replacement will implement established Best Management Practices (BMPs) in accordance with Energy Star guidelines, which take a holistic view of resource conservation, integrating both water and energy efficiency. Energy Star is a joint program of the Environmental Protection Agency and the Department of Energy. Its mission is to help consumers, businesses, and industry save money and protect the environment through energy efficient products and practices. Our first BMP is the replacement of outdated plumbing fixtures with high-efficiency models. These fixtures, complying with Energy Star standards, are designed to reduce the volume of water consumed in buildings, while also decreasing energy usage associated with water heating or cooling from electricity production and from on-site heating technologies. We will also enact Energy Star's BMP of regular maintenance and prompt repair of all plumbing fixtures. Regular maintenance prevents leaks and other issues that can lead to significant water and energy waste. Similarly, prompt repairs ensure that accidental water waste and the associated energy costs are minimized. Moreover, we are committed to Energy Star's comprehensive approach to continuous improvement and optimization by canvassing fixture replacement locations for additional water and energy-saving opportunities. This might include the optimization of HVAC systems, the implementation of energy-efficient lighting, or the adoption of advanced energy management systems, all of which indirectly contribute to water conservation by reducing the demand for water-intensive energy production. Additionally, we aim to bolster our water conservation efforts with a conscious focus on reducing electrical demand. This stems from the understanding that saving energy indirectly bolsters water supply since significant volumes of water are used in the production of electricity, particularly in thermal power plants where water is used to generate steam. By implementing these Energy Star-endorsed BMPs, we aim to significantly reduce water and energy consumption in Pima County facilities, aligning with a broader vision of environmental sustainability and resource conservation. This comprehensive approach ensures we're not just saving water, but also contributing to wider resource efficiency and sustainability goals.

Additional Supporting Documentation (pdf, jpg, word, excel) : Pima County Program Manager Resume Attachment.pdf

Additional Supporting Documentation (pdf, jpg, word, excel) : Pima County Fixture Estimate Documentation Attachment.xlsx

Additional Supporting Documentation (pdf, jpg, word, excel) : Pima County WCGF Budget Template.xlsx

Additional Supporting Documentation (pdf, jpg, word, excel) :

Additional Supporting Documentation (pdf, jpg, word, excel) : Pima County Budget Narrative Attachment.pdf

Average Score :

# of Reviews : 0

# of Denials : 0

Please use the following link to view the Budget

Budget Worksheet :

View Budget Worksheet : https://portal.ecivis.com/#/peerBudget/760ADF6F-7614-48F8-9254-0FF7344CD5B6

Application Goals :

View Application Goals : https://portal.ecivis.com/#/peerGoals/E36067E8-6F91-4148-AE81-B6B0F7641E9A

Created by : zengine+36768@srm.ecivis.com

Record ID # : 50703912

Last change : 2023-05-18T21:39:41+0000

Budget Table

Grant Award Budget For:

FY 2023 Water Conservation Grant Fund (WCGF)

WATER INFRASTRUCTURE FINANCE AUTHORITY OF ARIZONA

Project Name: Pima Coun

Budget Items

Category	Title	Units	Unit Cost	Extended Cost	Direct Cost	Indirect Cost	Cost Share
Personnel							
	Personnel	0	$0.00	$0.00	$98,843.00	$0.00	$425,659.00
Personnel Total		**0**	**$0.00**	**$0.00**	**$98,843.00**	**$0.00**	**$425,659.00**
Fringe Benefits							
	Fringe Benefits	0	$0.00	$0.00	$29,653.00	$0.00	$157,494.00
Fringe Benefits Total		**0**	**$0.00**	**$0.00**	**$29,653.00**	**$0.00**	**$157,494.00**
Travel							
	Travel	0	$0.00	$0.00	$47,250.00	$0.00	$0.00
Travel Total		**0**	**$0.00**	**$0.00**	**$47,250.00**	**$0.00**	**$0.00**
Equipment							
	Equipment	0	$0.00	$0.00	$0.00	$0.00	$0.00
Equipment Total		**0**	**$0.00**	**$0.00**	**$0.00**	**$0.00**	**$0.00**
Supplies							
	Supplies	0	$0.00	$0.00	$1,691,542.00	$0.00	$0.00
Supplies Total		**0**	**$0.00**	**$0.00**	**$1,691,542.00**	**$0.00**	**$0.00**
Contractual							
	Contractual	0	$0.00	$0.00	$0.00	$0.00	$0.00
Contractual Total		**0**	**$0.00**	**$0.00**	**$0.00**	**$0.00**	**$0.00**
Construction							
	Construction	0	$0.00	$0.00	$0.00	$0.00	$0.00
Construction Total		**0**	**$0.00**	**$0.00**	**$0.00**	**$0.00**	**$0.00**
Indirect Costs							

Budget Table

	Indirect Cost	0	$0.00	$0.00	$186,729.00	$0.00	$0.00
Indirect Costs Total		**0**	**$0.00**	**$0.00**	**$186,729.00**	**$0.00**	**$0.00**
Other							
	Other	0	$0.00	$0.00	$0.00	$0.00	$0.00
Other Total		**0**	**$0.00**	**$0.00**	**$0.00**	**$0.00**	**$0.00**

Pima County Resilient with Water Initiative
Water Conservation Grant Fund
Budget Narrative

This budget narrative presents each federal budget category, explaining each line item, and describing each cost basis. All costs are based on prior experience delivering similarly scoped projects and cost pricing research. All expenses are direct expenses unless specifically designated otherwise. The Pima County Health Department (PCHD) requests a grant total of **$2,054,017** for the Water Conservation Fund Grant, contributing **$583,153** in matching funds, for a program total of **$2,637,170**.

Personnel

The PCHD estimated salary and expenses are based on staff time allocation estimates, and current salary figures for those job classifications. Personnel will consist of a .5 FTE Program Manager who will coordinate between facilities, installation logistics, and fixture deliveries, work with the installation team to conduct Energy Star site assessments, and input data and prepare reports.

Personnel will also consist of a small team of Pima County plumbers who will complete installations. Installation labor cost is $34.45/hour as per Davis Bacon plumbing wage. Installation time estimates are calculated using manufacturer estimates. Toilet installation requires 4.0 hours; 3.5 hours for the toilet plus .25 hours for the toilet seat plus .25 hours for the toilet installation kit. Urinal installation requires 8.6 hours; 4 hours for the urinal plus 4 hours for the urinal installation kit plus .1 hours for the urinal cartridge plus .5 hours for the sealant/calk. Sink/faucet installation requires 1.85 hours; 1 hour for the faucet plus .75 hours for the faucet installation kit plus .1 hours for plumber's tape.

Program Management total is calculated by multiplying annual salary x % of full time equivalent (FTE) x program years = Individual Total. Plumbing labor total is calculated by multiplying the labor rate x the time per fixture x the number of units/fixtures.

The Program Management total is requested as grant funds. The plumbing labor total is provided as matching funds.

a. Salaries and Wages	**Salary**		**FTE**	**Years**	**Grant Total**
Name and/or Title					
Program Manager, Eric Wilson	$65,895.00		0.75	2	$98,843.00
	Time Per Fixture	**Labor Rate**	**Units**	**Match**	
WaterSense Commercial Toilet Installation	4.00	$34.45	1581.00	$217,862.00	$0.00
Waterless Urinal Installation	8.60	$34.45	622.00	$184,280.00	$0.00
Sensor Commercial Faucet Installation	1.85	$34.45	369.00	$23,517.00	$0.00
TOTAL SALARIES AND WAGES				**$425,659**	**$98,843**

Fringe Benefits

Benefit rates are calculated using the actual ERE rate for existing identified employees or using the standard rate of 37%; which includes Social Security (6.2%), Medicare (1.45%), Arizona Retirement System (mandatory) (12.04%), workers compensation (.26%), long-term disability (.25%), unemployment insurance (.26%), health savings account (4.13%), employee assistance program (.26%), and life, health, dental insurance and other residual benefit expense (12.15%). Fringe benefit costs for current employees depend on the elections of each employee. Fringe benefits are calculated by multiplying yearly personnel totals for each current employee or job title classifications by the elected or average fringe benefit percentage, and then summing each individual total.

The Program Management benefits total is requested as grant funds. The plumbing labor benefits total is provided as matching funds.

b. Fringe Benefits	Personnel Total	Fringe Benefit %		Match	Grant Total
Program Manager, Eric Wilson	$98,843	0.30			$29,653.00
WaterSense Commercial Toilet Installation	$217,862	0.37		$80,609	
Waterless Urinal Installation	$184,280	0.37		$68,184	
Sensor Commercial Faucet Installation	$23,517	0.37		$8,701	
TOTAL FRINGE BENEFITS				**$157,494**	**$29,653**

Travel Costs

Due to installation times and fixture delivery logistics we estimate five installation trips per facility. Due to some facilities being remotely located within Pima County we estimate an average of 42 round trip miles per facility. 360 Pima County facilities will require fixture installation and Energy Star assessments. The mileage reimbursement rate is currently $.625/mile. Travel for fixture installation is calculated by multiplying the number of facilities by the trips/facility by the average mileage by the mileage reimbursement rate.

f. Travel	Facilities	Trips/Facility	Average Mileage	Mileage Rate	Total
Fixture Installation Trips	360	5	42	0.625	$47,250
TOTAL TRAVEL					**$47,250**

Equipment

This program requires no equipment.

Materials and Supplies

Materials and supplies for this program consist of the new water efficient bathroom fixtures. WaterSense Commercial Toilets cost $793.50; $690 for the toilet plus $69 for the toilet seat plus $34.50 for the toilet installation kit. Waterless urinals cost $441.87; $375 for the urinal plus $25.87 for the urinal installation kit plus $34 for the urinal cartridge plus $7 for the sealant/caulk. Sensor commercial faucets cost $439.50. Pima County Facilities Management estimates needing 1,581 WaterSense commerical toilets, 622 Waterless urinals, and 369 Sensor commercial faucets. This estimate is based on the maximum occupancy of each County facility and the County requirements for bathroom fixtures per maximum occupancy totals for all 360 Pima County facilities. This application contains a separate attachment which documents all facilities, maximum occupancies, and fixture estimates. The Materials and Supplies Total is calculated by multiplying the fixture costs by the units needed, and then summing the individual fixture totals.

e. Materials and Supplies	Cost	Units	Total
WaterSense Commercial Toilet	$793.50	1581	$1,254,524
Waterless Urinal	$441.87	622	$274,843
Sensor Commercial Faucet	$439.50	369	$162,176
TOTAL MATERIALS AND SUPPLIES			**$1,691,542**

Contractual/Subrecipients

There are no Contractual or Subrecipient costs for this grant program.

Construction

There are no Construction costs for this grant program.

Other

There are no Other costs for this grant program.

Indirect Costs

Pima County requests a 10% de minimis rate on Modified Total Direct Costs (MTDC). MTDC includes: direct salaries and wages, applicable fringe benefits, materials and supplies, services (including contracts), travel, and the first $25,000 of each subaward (none in this budget). MTDC excludes: equipment, capital expenditures, charges for patient care, participant support costs, and the portion of each subaward in excess of $25,000. Indirect costs are calculated by multiplying each category base by the 10% de minimis rate, then adding the indirect category totals.

The MTDC base is $1,867,288: $98,843 for Personnel, $29,653 for Fringe Benefits, $47,250 for Travel, $1,691,542 for Materials and Supplies. The Year 1 Indirect Costs Total is $186,729.

Total Year 1 Costs

Total Costs for the Pima County Water Conservation Grant Fund are calculated as the sum of Personnel, Fringe Benefits, Travel, Materials and Supplies, Equipment, Contractual, Other, and Indirect Costs.

Total Year 1 Costs	
Budget Category	**Total**
Personnel	$98,843
Fringe Benefits	$29,653
Travel	$47,250
Equipment	$0
Materials and Supplies	$1,691,542
Contractual	$0
Other	$0
Indirect Costs	$186,729
Grant Total	**$2,054,017**

Pima County Match Commitment

The 25% match requirement for our Grant Total of $2,054,017 is $513,504. Pima County's match commitment is detailed in the budget narrative above. It consists of $425,659 in installation labor and $157,494 in installation fringe benefits. The sum of these matching commitments is $583,153, greater than the $513,504 minimum requirement.

PROJECT CHARTER

DEPARTMENT: Natural Resources Parks & Recreation

PROJECT NAME: Arthur Pack Park Reclaimed Water Conversion

PROJECT ID: CPR.PAPPRW

Prepared By: Shawn Tillson

Date Prepared: May 1, 2023

Approval of this Project Charter indicates 1) approval of the constraining factor established for this project, 2) an understanding of the purpose and content as described in this document, and 3) agreement with the Scope, Schedule, Budget and Quality of the recommended alternative. By signing this document, each individual agrees that work should be initiated on this project with **all necessary resources allocated** and commits to fulfill his/her role and responsibilities as described herein.

Approver Name	Position	Signature	Date
Shawn Tillson	Project Manager		
Victor Pereira	Department Director		
Sheila Holben	County Administration		

*Note: Not all sections of the Project Charter format are applicable to all projects. To insure all sections have been completed as needed, do not delete any sections from this document. If a section is not applicable to the project, simply type "Not Applicable". See "Guidance for Preparing a Project Charter" and "Checklists for Project Charter & Gates" for additional information.

Contents

PROJECT OVERVIEW 3
Background: 3
Need Statement: 3
Scope Statement: 3
Justification: 3
BUDGET MANAGEMENT 3
Cost Model Summary and Financial Schedule for Requested Budget 3
Requested Funding Sources 3
Map of Project Area with Polygon 4
ESTIMATED BENEFITS OF THIS PROJECT 5
SCHEDULE MANAGEMENT 5
Critical Path Tasks and Anticipated Completion Dates 5
QUALITY MANAGEMENT 5
Constraining Factor 5
ALTERNATIVES ANALYSIS 6
TEAM MEMBER MANAGEMENT 7
Roles and Responsibilities 7
Summary of Team Member Meeting 8
RISK MANAGEMENT 8
Assessment of Risks to Achieving Scope, Schedule, Budget and/or Quality 8
COMMUNICATION MANAGEMENT 9
Proposed Gate Meetings 9
PROCUREMENT MANAGEMENT 9
Proposed Project Delivery Method 9
APPENDIX A – Map with Polygon ..... **Error! Bookmark not defined.**
APPENDIX B – Cost Model 10
APPENDIX C – Microsoft Project Schedule 10
APPENDIX D – Team Member Meeting Minutes 10
APPENDIX E - CIP Program/Phase Maintenance Request Form 10

PIMA COUNTY

PROJECT OVERVIEW

Background:

Tucson Water reclaimed system is recognized globally as one of the earliest and most innovative approaches to making the best use of treated water. Reclaimed water has been safely used to irrigate turf at schools, parks, and golf courses. Pima County Natural Resources Parks and Recreation (NRPR) currently has 6 parks connected to reclaimed water for irrigation and is continually exploring opportunities to become less dependent on potable water.

Need Statement:

Water reuse can provide alternatives to existing water supplies and be used to enhance water security, sustainability, and resilience.

Scope Statement:

Convert existing irrigation system to reclaimed water. Include necessary components to meet Tucson Water standards. Provide the ability to switch from reclaimed water to potable water depending on availability.

Justification:

Irrigation with recycled water can reduce the need for chemical fertilizers. Nutrients such as nitrogen, potassium and phosphorous, survive the water reclamation process, giving recycled water an added benefit. In addition, reclaimed water costs a fraction of potable water currently being used at the park.

BUDGET MANAGEMENT

[Cost Model attached as Appendix B]

Cost Model Summary and Financial Schedule for Requested Budget

Phase	FY 23/24	FY 24/25	FY 25/26	FY 27/28	FY 28/29	TOTAL	Soft Cost %
Land Acquisition	0	0	0	0	0	*0*	*0%*
Project Development	0	0	0	0	0	*0*	*0%*
Design	$167,000	$20,000	0	0	0	*$187,000*	*9.4%*
Construction	$900,000	$915,000	0	0	0	*$1,815,000*	*3.3%*
Utility Relocation	$100,000	0	0	0	0	*$100,000*	*0%*
Public Art	$7,000	$11,150	0	0	0	$18,150	*0.9%*
Contingency	0	$53,850	$76,000	0	0	*$129,850*	*0%*
TOTAL PROJECT BUDGET	***$1,174,000***	***$1,000,000***	***$76,000***	***0***	***0***	***$2,250,000***	***13.6%***

Requested Funding Sources

Fund Source Description	FY 23/24	FY 24/25	FY 25/26	FY 26/27	FY 27/28	TOTAL
A. Pay Go	$1,174,000	$1,000,000	$76,000	0	0	*$2,250,000*
B.	0	0	0	0	0	*0*
C.	0	0	0	0	0	*0*
D.	0	0	0	0	0	*0*
TOTAL FUNDING	***$1,174,000***	***$1,000,000***	***$76,000***	***0***	***0***	***$2,250,000***

Estimated Operations & Maintenance Post Occupancy (annual costs)

O&M Description	FY 23/24	FY 24/25	FY 25/26	FY 26/27	FY 27/28	FY 28/29
Utilities	0	0	0	0	0	0
Supplies	0	0	0	0	0	0
Services	0	0	0	0	0	0
Capital	0	0	0	0	0	0
Personnel Costs	0	0	0	0	0	0
TOTAL ESTIMATED O&M	***0***	***0***	***0***	***0***	***0***	***0***

Map of Project Area with Polygon

On the next page ☐ or attached as Appendix ☒ is a map of the area associated with this project. To meet certain Pima County requirements, any project that anticipates ground disturbance must show on this map a polygon of the limits of potential ground disturbance.

ESTIMATED BENEFITS OF THIS PROJECT

Benefit	Estimated Level of Benefit			
	High	Med	Low	None
Protects Health, Safety & Property	☐	☒	☐	☐
Increases Capacity	☐	☐	☒	☐
Meets Regulatory/Mandated Requirement	☐	☐	☐	☒
Promotes Economic Development	☐	☒	☐	☐
Makes Use of Non-County Funding	☐	☐	☒	☐
Reduces Long-Term Costs to the County	☒	☐	☐	☐
Rehabilitates/Preserves/Enhances Existing Asset	☒	☐	☐	☐
Enhances Environment and/or Cultural Resource	☐	☐	☒	☐
Improves System Continuity	☐	☒	☐	☐
Meets Master/Long-Range Plan	☐	☒	☐	☐
Is Regionally Significant	☒	☐	☐	☐

SCHEDULE MANAGEMENT

[Microsoft Project Schedule attached as Appendix C]

Critical Path Tasks and Anticipated Completion Dates

	Critical Path Task Description	Anticipated Completion Date
1	Design	August 2023
2	Procurement	January 2024
3	Construction	March 2024
4	Substantial Completion	May 2025
5	Project Closeout	July 2025

QUALITY MANAGEMENT

Constraining Factor

For this project, the following one factor is understood by the project team and senior management to be the least flexible to change:

☐ Scope ☐ Schedule ☒ Budget ☐ Quality

Provide a brief explanation regarding criticality of chosen constraining factor: Pay as you go General Funding source is dependent on sales tax dollars and user fees. Due to budgeting concerns related to recent events additional funding source may need to be provided.

ALTERNATIVES ANALYSIS

☐ Viable alternatives have been identified and are described below.

OR

☐ Alternatives need to be developed and/or further evaluated. Alternative Summary and Recommendation to be presented at a 2.1 Gate.

OR

☒ No alternatives are anticipated for this project.

Alternative 1:

Alternative 2:

Assumption & Constraint Analysis

1. ☒ Constraint (Known) or ☐ Assumption (Unknown)	Alternative(s) 1 ☐ 2 ☐
Description: Tucson Water Design Review and Construction Approval Process Impact Discussion: Provide enough lead time and funding to accommodate design review and construction related matters.	

2. ☐ Constraint (Known) or ☐ Assumption (Unknown)	Alternative(s) 1 ☐ 2 ☐
Description: Impact Discussion:	

3. ☐ Constraint (Known) or ☐ Assumption (Unknown)	Alternative(s) 1 ☐ 2 ☐
Description: Impact Discussion:	

4. ☐ Constraint (Known) or ☐ Assumption (Unknown)	Alternative(s) 1 ☐ 2 ☐
Description: Impact Discussion:	

TEAM MEMBER MANAGEMENT

Roles and Responsibilities

Member's Name: Shawn Tillson	Affiliation: CPO
Role: Project Manager	
Responsibility: Manage overall project, assure adherence to schedule, budget, and overall quality. Coordinate input from various entities within the county, design and construction procurement, construction inspection.	

Member's Name: Tony Somers	Affiliation: CPO
Role: Assist Project Team	
Responsibility: Project oversight.	

Member's Name: Robert Padilla	Affiliation: NRPR
Role: Deputy Director	
Responsibility: Project oversight, provide necessary feedback on design review and coordination.	

Member's Name: Ron O'Dell	Affiliation: NRPR
Role: Operations Manager	
Responsibility: Assist with project oversight, provide operational feedback and coordinate with construction activities.	

Member's Name: Shane Kyzer	Affiliation: NRPR
Role: Field Manager	
Responsibility: Provide operational feedback and coordinate with construction activities.	

Member's Name: Dawn Dargan	Affiliation: Procurement
Role: Compliance Review	
Responsibility: Assist and assure project contracts are compliant with procurement laws.	

Member's Name: Peter Anderson	Affiliation: Finance
Role: Finance Review	
Responsibility: Review funding and provide CIP funding information.	

Member's Name: Ian Milliken	Affiliation: S&C
Role: Cultural Review	
Responsibility: Provide necessary review needs/requirements for Cultural Clearance related to ground disturbance.	

Member's Name: Daniel Ice	Affiliation: DSD
Role: Permit Review	
Responsibility: Assist with permitting requirements.	

Summary of Team Member Meeting

☒ Meeting Minutes are attached as Appendix.

OR

☐ A summary of the Team Member meeting is as follows:

RISK MANAGEMENT

Assessment of Risks to Achieving Scope, Schedule, Budget and/or Quality

Risk Tables

1. Risk Name: Construction Material & Equipment (pipes, valves, fittings, electrical)							
Probability:	High ☒	Med ☐	Low ☐	**Impact:**	High ☒	Med ☐	Low ☐
Action:	Control ☒	Absorb ☐	Avoid ☐	Deflect ☐			
Mitigation Strategy: Identify material and lead time during design. Provide enough time during Construction phase to allow Contractor adequate contract days to furnish and install equipment.							

2. Risk Name: Schedule							
Probability:	High ☐	Med ☒	Low ☐	**Impact:**	High ☒	Med ☐	Low ☐
Action:	Control ☒	Absorb ☐	Avoid ☐	Deflect ☐			
Mitigation Strategy: Procuring construction material within quantities available and coordinating installation efforts accurately. Require contractor to provide bi-weekly construction updates or reports. Schedule monthly meeting to track progress.							

3. Risk Name: Construction Activities							
Probability:	High ☒	Med ☐	Low ☐	**Impact:**	High ☒	Med ☐	Low ☐
Action:	Control ☒	Absorb ☐	Avoid ☐	Deflect ☐			
Mitigation Strategy: Designate, identify, or prohibit Contractor equipment staging area. Provide schedule and activities to POC's for advance notification and warning.							

4. Risk Name: Safety and Park Coordination							
Probability:	High ☒	Med ☐	Low ☐	**Impact:**	High ☒	Med ☐	Low ☐
Action:	Control ☒	Absorb ☐	Avoid ☐	Deflect ☐			
Mitigation Strategy: Identify work zone areas, alternate routes, and provide advance public notices. Require contractor to provide signs, signals, barricades, and flaggers.							

5. Risk Name: Notifications							
Probability:	High ☒	Med ☐	Low ☐	**Impact:**	High ☒	Med ☐	Low ☐
Action:	Control ☒	Absorb ☐		Avoid ☐		Deflect ☐	
Mitigation Strategy: Establish point of contacts for coordination of public notifications. Provide two-week construction schedule to Kino Administration. Provide Kino immediate updates on scheduling changes.							

6. Risk Name: TBD							
Probability:	High ☐	Med ☐	Low ☐	**Impact:**	High ☐	Med ☐	Low ☐
Action:	Control ☐	Absorb ☐		Avoid ☐		Deflect ☐	
Mitigation Strategy:							

COMMUNICATION MANAGEMENT

Proposed Gate Meetings

For this project, the following gate meetings are proposed:

		Proposed Date
☒	Gate 1-1 Entry Gate	June 5, 2023
☐	Gate 2-1 Project Development	
☐	Gate 3-1 Preliminary Design	
☒	Gate 3-2 Construction Documents Ready for Contractor Selection	January 8, 2024
☐	Gate 4-1 Ready to Issue Letter of Construction Acceptance	
☒	Gate 5-1 Close Out	June 30, 2025

PROCUREMENT MANAGEMENT

Proposed Project Delivery Method

Please use the Project Delivery Method Selection Tool and add to the appendix of this charter.

Total Score	Selection Method via Tool	Borderline	Recommendation
3	CIP Project Delivery Selection Tool – Horizontal	Choose an item.	JOC

Provide Justification for selected procurement delivery method.

Project scope, budget, and schedule with completed selection tool suggest JOC procurement

If externally managed, a multiple project program, or a 2-1 Gate will determine the delivery method, indicate below:

- ☐ Managed/Delivered by Others
- ☐ Multiple Project Program, will use many smaller JOCs to deliver
- ☐ To be Determined

APPENDICES

[Attach legible pdf attachments after the Project Charter has been converted to pdf format.]

APPENDIX B – Cost Model

[Attach digital Cost Model]

APPENDIX C – Microsoft Project Schedule

[Attach digital MSP Schedule]

APPENDIX D – Procurement Method Selection Tool Template

[Attach digital Selection Tool Template]

APPENDIX E – Team Member Meeting Minutes

[Can be embedded in Charter or as Appendix]

APPENDIX F - CIP Program/Phase Maintenance Request Form

[AKA CAS form. The data on this form must match the data in the Project Charter]

Water Conservation Grant Fund Application Evaluation
Round 1

Pima County Facilities Management – Pima County Water Conservation Initiative: Efficient Fixture Replacement Program	**WC1-039-2023**
Grant Amount	$2,054,017.00
Category	Efficient Fixtures/System Upgrades
Summary	Pima County proposes to use the grant funds to undertake a multi-phase water conservation initiative that focuses on three primary components: fixture replacement, facility assessments, and training of facilities management personnel. • Fixture Replacement: large-scale replacement of older, inefficient toilets, urinals, and sinks across all county facilities with more water-efficient models. The applicant plans to replace 2,874 toilets, 1,036 urinals, and 2,460 sinks, which are currently using up to 3.0 gallons per flush (gpf) for toilets and 1.2 gpf for urinals. • System Assessments: Simultaneously, a detailed audit of each facility's water usage, identifying areas of excessive water use, potential leaks, and opportunities for further water conservation measures. • Training of Facilities Management Personnel: During both the processes of installing the new fixtures and creating Energy Star facility assessments Pima County plumbing staff will gain continuous training. Staff will receive training in new bathroom fixture maintenance schedules and regimes.
Location	Pima County
Estimated water savings in acre-feet per year	18
Duration of project/program	The expected duration of this the project is between 90 days and 120 days. The project activity period will include planning and design, demolition, construction, and installation. Once completed, the result will be a permanent water conservation benefit to existing public infrastructure.

Conservation Activity Benefits and Results

Statutory Evaluation Criteria #1, #2, and #4

Activity Type	Programs or projects to reduce structural water overuse issues.
Source of water	Colorado River water is delivered through the Central Arizona

	Project (CAP) and Pima County groundwater.
Community information	Pima County is in the south-central region of Arizona and is home to over one million residents, making it the second most populous county in the state. However, most of the Pima County's geographical area is rural. The demographics of Pima County are diverse, with a mix of ethnicities and cultures. The U.S. Census Bureau reports that as of 2021, the county was approximately 55% non-Hispanic white, 35% Hispanic or Latino, 4% African American, and 3% Native American, with the remainder being of other or mixed races. The economy of Pima County is broad-based and diverse, with principal economic activities spanning government, education, healthcare, tourism, and manufacturing.
Costs and benefits of project/program	The applicant states the following for costs and benefits: Costs: The primary cost for this program is the large upfront cost of purchasing and installing new bathroom fixtures. There will also be ongoing maintenance costs for the new fixtures. However, the applicant states that maintenance costs would exist regardless of whether they maintain new or old fixtures; and the maintenance costs should be partially offset by wasting less water in leaks. Benefits: The applicant anticipates a significant reduction in water usage, translating into cost savings on water bills for Pima County. Standardized site assessments will identify more water and energy conservation opportunities to create a program of continuous improvement. It will help foster a culture of sustainability within the County's operations, serving as a model for other departments. It will also provide an opportunity for public outreach and education about water conservation, promoting community engagement and participation. By reducing the demand for water, the Pima County Resilient with Water Initiative will indirectly support the health of local ecosystems which rely on the same water sources. This is beneficial for biodiversity and overall ecological health.

Funding Sources

Statutory Evaluation Criteria #3 and #5

Eligibility for LTWAF or WSDF	The applicant describes the nature of the project being more suitable for funding through WIFA's Water Conservation Grant Fund, rather than the Long-Term Water Augmentation Fund or Water Supply Development Fund.

Water Conservation Grant Fund Application Evaluation
Round 1

Leverage of multiple funds	Pima County is currently planning for future applications to the FEMA Building Resilient Infrastructure and Communities (BRIC) Program as well as the Department of Energy's Energy Efficiency Block Grant. The applicant also noted there may be opportunities for public-private partnership funding.
Source of funding and match	Pima County states their matching commitment comes from direct services to the grant, not in-kind contributions. Pima County meets its minimum match commitment ($513,504) by contributing $425,659 in fixture installation labor and $157,494 in associated fringe benefits, for a total of $583,153.

Capacity, Feasibility, & Public Comment
Statutory Evaluation Criteria #6, #7, and #8

Qualifications and capacity of applicant	Applicant listed the following qualifications: The Pima County Resilient with Water Initiative is led by Energy Program Manager Eric Wilson. Wilson has both a Bachelor of Science in Environmental Science and a Bachelor of Arts in Energy Policy and Management. Prior to joining Pima County, Wilson accumulated three years of experience managing solar construction projects, deepening his understanding of sustainability and resource management. • The Facilities Management department will also include experienced plumbing personnel, all of whom possess a broad range of skills, knowledge, and certifications in facilities operations and maintenance, project management, and environmental best practices. • The Grants Management and Innovation Department within Pima County will support the award management activities, including developing subaward agreements, convening monthly implementation status meetings, and submitting financial reports. • The Grants Management and Innovation Finance Division evaluates and processes all financial transactions including accounting entries, cash flow reporting, and expense monitoring, reimbursement requests, fiscal records, and audit assistance. • The Finance Division also coordinates the County's annual Single Audit process with the Arizona Office of the Auditor General. The Pima County government reported a total of $138 million in federal awards in Fiscal Year 2021, had no audit findings, and was determined to be a low-risk auditee. Pima County uses CGI Advantage to track and manage all financial and budget activities.

Water Conservation Grant Fund Application Evaluation
Round 1

Feasibility of project/program	The applicant plans for multiple installation teams to execute installations simultaneously. Additionally, the applicant stated that as they learn more about the installations, the Program Manager will coordinate installations to further optimize schedule and minimize bathroom closures for County employees and the public. Choosing a two-year implementation schedule instead of one year also creates room in the schedule for accommodating old plumbing configuration challenges and the day-to-day operational needs of facility staff. Thus, the program will be fully staffed from day one. Additionally, the applicant developed a plan with partners from the Pima County Water Conservation Action Group to learn and optimize scheduling as they progress.
Public comments	The Pima County Water Conservation Action Group has been instrumental in shaping their plan. The Pima County Water Conservation Action Group consists of water utilities, academic partners, and municipal governments including the University of Arizona Water Research Center, City of Tucson, Metro Water District, Arizona State University Management Center for Water Policy, Central Arizona Project (CAP), Arizona Department of Water Resources, Bureau of Reclamation, Tohono Odham Nation, and other partners. This working group provided invaluable feedback and guidance to plan this program. Their consensus on the necessity and effectiveness of fixture replacements was a key factor in Pima County prioritizing this replacement project as they begin the longer process of Energy Star certification and associated site assessments. In addition, they will also be involving the broader public as stakeholders in this project. Pima County conducted electronic vehicle station surveys at County libraries to gain pinpoint feedback which is helping the County set up strategically placed charging stations. This program will use similar surveys as well as informational placards from the water efficient fixture manufacturers to educate, inform, and elicit opinions from the public which will inform future conservation opportunity prioritization and implementation.

Technical Review:

The Applicants **has a current SAM.GOV UEI #** which allows them to apply for federal funds.

The applicant has completed all steps in the grant application process and is requesting funding for a project / program that is acceptable under the regulations.

Water Conservation Grant Fund Application Evaluation
Round 1

Expenditure Code 5.8 Clean Water: Water Conservation

ARPA Final Rule (31 CFR Part 35 RIN 1505–AC77) defines water infrastructure projects as "eligible projects under the Clean Water State Revolving Fund." "A project shall meet the criteria of CWSRF eligibility found in Section 603(c) of the Clean Water Act (CWA)". Specific Expenditure Codes were created to define activities available under the water infrastructure category.

The Interagency Service Agreement (ISA-ARPA-WIFA-070122-01) between the State of Arizona, Office of the Governor and WIFA required the project / program be specific to Expenditure Code 5.8 Clean Water: Water Conservation.

WIFA staff find this project / program is consistent with Expenditure Code 5.8 Clean Water: Water Conservation as determined in Section 603c of the Clean Water Act (CWA) and the ISA.

Attachments:

- Pima County Facilities Management Application – WC1-039-2023
- Manager Resume
- Budget
- Budget Narrative Justification
- Project ID Plan

Evaluation Criteria Statutory Reference:

49-1334. **<u>Evaluation criteria for water conservation programs and projects from the water conservation grant fund; procedures</u>**

The authority shall determine the order and priority of water conservation programs and projects proposed to be funded in whole or in part with monies from the water conservation grant fund based on the following, as applicable:

1. The extent to which the water conservation program or project achieves one or more of the results prescribed by section 49-1332, subsection A.
2. The costs and benefits of the water conservation program or project, including environmental costs and benefits.
3. If the water conservation program or project is eligible for funding from the long-term water augmentation fund established by section 49-1302 or the water supply development revolving fund established by section 49-1271 and if the nature of the water conservation program or project makes funding from the long-term water augmentation fund or the water supply development revolving fund impractical.
4. The ability to provide multiple benefits.
5. The degree to which the water conservation program or project will maximize or leverage multiple available funding sources, including federal funding.
6. The qualifications and capacity of an applicant.
7. The feasibility of the water conservation program or project.
8. Public comments.

WCGF Committee Evaluation:

☐ Recommend Rejection of Grant Application

☐ Recommend Approval of Grant Application

☐ Recommend Approval of Grant Application with Modifications

Tab 9

AGENDA ITEM:

Recommend Approval of Grant Application WC1-040-2023 – City of Prescott – WCGF – $3,000,000

ACTION REQUIRED:

Review, Discuss & Recommend Approval

PREVIOUS ACTION:

None

STAFF CONTACT:

Lindsey Jones

RECOMMENDED DISCUSSION TIME:

5 Minutes

ATTACHMENTS:

- Grant Application WC1-040-2023 – City of Prescott
- Water Conservation Grant Fund Evaluation

STAFF COMMENTS:

None

Water Meter Replacement Program

Profile : nicole.metcho@prescott-az.gov

Entity Name: : City of Prescott

I. General Information

1. Title of Project: : Water Meter Replacement Program

2.Type of Conservation Activity (A.R.S. § 49-1332(B)): : Programs and projects that reduce water use Per A.R.S. 49-1332(B)(2)

Note: for the purpose of the application, the term project and program will be referred to as “conservation activity”

3. Is this for an individual Water Conservation Project or a general Water Conservation Program? : Water Conservation Programm

Please describe the specific components that make it a program. : The City of Prescott (City) Water Utility consists of nearly 27,000 water service connections, most of the water meters currently installed are between 10 - 15 years old. Between FY24 - FY29 the City will be phasing in all new water meters. The City understands the need to advance its conservation efforts by phasing in Advanced Metering Infrastructure (AMI). The specific components of the program include: 1. Replacing existing Automatic Meter Reading (AMR) that is past or nearing its operational lifespan 2. Adding AMI network 3. City Billing Department interface and training 4. Customer interface, outreach, and support 5. Integration of the City’s upcoming general plan update and to support the City’s efforts to meet or exceed Arizona Department of Water Resources (ADWR) conservation requirements 6. To support the City’s efforts to meet or exceed ADWR conservation requirements

4. What is the location of conservation activity?

City: : Prescott

County: : Yavapai County

Program/Project Congressional District (check all that apply) :

2

Program/Project Legislative District (check all that apply) :

1

Watershed : Verde River Basin

Active Management Area (if applicable): : Prescott

Irrigation Non-Expansion area (if applicable): : N/A

5.Conservation Activity Cost

Amount requested from the WCGF for this activity: : $3,000,000.00

Amount of matching funds: : $750,000.00

Total conservation activity cost: : $12,500,000.00

When applying for the grant, note that a single water conservation program grant may not exceed $3,000,000. A single water conservation project grant may not exceed $250,000. The WCGF requires at least a twenty-five percent match for each water conservation program or project.

6. What is the estimated water savings in acre-feet per year? : 405

Explain calculation: : Based on American Water Works Association report titled "Increasing Consumer Benefits & Engagement in AMI-based Conservation Programs" dated January 2022, it states, “We found that signing up for an AMI portal led to an average decrease in daily water usage in the range of 6.3 to 12.1%.” Applying this calculation to the City’s 2022 water production of 6,431 acre-feet (AF), results to an estimated range of potential water savings between 405 AF/yr and 778 AF/yr. The City’s citizens are very active in efficient water use, with this type of community interest and with deliberate education and outreach, the City anticipates water savings to be on the higher end of the range.

7. What is the expected duration of the conservation activity? : The newly installed meters last between 10 and 12 years. Electronic communication devices can last up to 20 years. As the meters and electronic communication devices reach the end of their life span, they will be replaced with updated technology.

II. Conservation Activity Benefits and Results

8. What is the water conservation activity you propose to fund with grant monies? Describe in detail. : The grant monies will be used to begin the first phase of the City’s five-year Water Meter Replacement Program (WMRP). This program will replace every water meter with an AMI, a robust form of water metering technology that allows direct transmission of water use data, to the utility company. AMI improves the ability to collect accurate water usage data to improve billing, leak detection, and water resource management. The technology has now reached competencies that allow for communities, with terrain similar to the City's, to participate within more acceptable cost levels. AMI allows real time reads, using cellular technology, to transmit to the database. With this type of communication, the customer can download a cellular application to access their live usage reads. The advanced equipment will alert the customer and the City alike of any unusual activity that may occur within their household piping system. The new transmitting devices would allow leaks to be detected up to 30 days sooner than current equipment permits. The software that accompanies this program would instruct customers where and how to look for leaks and provide other techniques for reducing water loss. Customers will be able to access their water usage on a daily basis and avoid potentially losing thousands of gallons of water per incident. Since this data is available to the homeowner and the City, leak alerts will be transmitted within 6 hours of a high-flow incident, allowing correction of the water loss.

9. What is the source of the water that will be conserved? If it is mainstem Colorado River water or Colorado River water delivered through the Central Arizona Project, please clearly indicate so. : The City resides within the State defined Prescott Active Management Area (AMA). This area consists of two groundwater sub-basins, the Little Chino Sub-Basin and Agua Fria Sub-Basin. The City's wellfields water source is produced from the Little Chino Sub-basin aquifer system.

10. Describe the community (population size, demographics, principal economic activities, etc.) impacted by the conserved water. : Known as "Everybody's Hometown" Prescott is home to the downtown Courthouse Plaza, famous Whiskey Row, World's Oldest Rodeo, Prescott Fine Arts Association, Sharlot Hall Museum, Phippen Art Museum, Folk Arts Fair, Frontier Days, and Territorial Days. It has been officially designated as "Arizona's Christmas City" by the State of Arizona. The Courthouse Plaza, located in the center of downtown and framed by towering elms, is the focal point for a myriad of activities, including crafts fairs, antique shows and art shows. The plaza and Yavapai County Courthouse are well-known throughout Arizona as symbolizing the quintessential mid-western downtown square. The City was founded in 1863 and incorporated in 1883. During the late 1800s, Prescott twice served as the territorial capital, and the Governor's Mansion is now preserved at the Sharlot Hall Museum. The current municipal boundaries of Prescott encompass an area of approximately 45.6 square miles with a population of 45,827 as of the 2020 decennial census. The City is the base of Yavapai County government operations. Located in the mountains of north central Arizona approximately 95 miles northwest of Phoenix (the State capitol) and 90 miles southwest of Flagstaff, the City borders the Prescott National Forest to the south and west. The average elevation is 5,400 feet. The council-manager form of government was adopted in 1958. The Mayor is elected on a nonpartisan ballot to represent the entire City for a two-year term. The six members of the Council are elected at large for four-year terms on a nonpartisan ballot. Three of the six positions and the Mayor's position are up for reelection at the same time. Under the provisions of the City Charter, the Mayor and City Council are responsible for appointing the City Manager, City Attorney, City Clerk, and City Magistrate. The City Manager is responsible for carrying out its established policies, appointing department heads, and administering operations. A staff of 518 full-time equivalent City employees working within fourteen City departments provides a full range of municipal services. The municipal government provides police, fire, library, recreation, parks, trails, golf, wastewater, water, street improvements and maintenance, solid waste, municipal airport, planning and building, economic development, and general administration services. The annual budget serves as the foundation for the City's financial planning and control. The Mayor and City Council set the City's long-term strategic direction and the goals that guide the departments in their budget preparation. A proposed balanced budget is presented to the City Council for review and discussion in mid spring with the final adoption in June. The fiscal year begins on July 1st. Legal control over the budget derives from State statutes and City Charter which prohibit the City from exceeding its adopted budget on the fund and department level. The residents of Prescott approved a Home Rule exemption, the latest in August 2021, to the State of Arizona's expenditure limitation requirement. With this exemption, which is in effect for four consecutive years, the City can determine the budget level as long as the City can identify resources to cover expenditures. The budget appropriated by the City Council consists of all planned expenditures and the resources to cover them. Although small in population, Prescott is the center for trade in the region, and as a result has grown into a community with a robust, diverse economy, which includes government, education, health care, manufacturing, and tourism. As of the census of 2020, the population density was 1,019 people per square mile (353.5/km²). The racial makeup of the city was 84.4% White, 0.4% Black or African American, 0.6% Native American, 2.0% Asian, 0.2% Pacific Islander, 4.2% from two or more races and 8.6% of the population were Hispanic or Latino. In the city, the population was spread out with 20.12% under the age of 24, 13.8% from 25 to 44, 27.31% from 45 to 64, and 38.77% who were 65 years of age or older. The median age was 59 years. Females make up 51.08% of the population and males are 48.92%. The median income for a household in the city was $58,562, and the median income for a family was $61,090. The per capita income for the city was $41,225. About 11.2% of the population were below the

poverty line. The City currently maintains approximately 26,185 service connections. The estimated population served by the City Water Utility is 58,000 people. The citizens are a mix of full-time and part-time residents. The City promotes water conservation rebate incentives such as turf removal, ultra-efficient washing machines, toilet replacements and more. The citizens of Prescott are very invested in finding ways to help conserve water.

11. What is the extent to which your water conservation activity achieves one or more of the following (select all that apply): :

value1

value2

value3

Describe: : The City expects long-term reductions in water use in all existing billing categories (Single Family, Multi-Family, Industrial, Commercial, Government, Construction, and Turf – both over and under 10 acres). The City's water use is predominately residential, in 2022, the City served approximately 4,300 acre-feet to this category. With the range estimate referenced in Question 6, The City anticipates between 405 and 778 acre-feet of water savings in the long-term. Due to the majority of the supplies being served to this category, the City is preparing its outreach plans to help customers achieve possible long-term reductions and improved efficiencies. The City knows that outreach planning is critical to this and other customer sectors to maximize the benefits of an AMI system. Since the new meters and software system will be able to provide near-real time water usage rates, this increases the likelihood that a leak, in the customer's system, would be identified and mitigated in less than a day. Additionally, the new software will allow customers to view their daily water usage and adjust their usage to fit their needs. With reductions in water use and improvements in water use efficiency, along with faster detection of leaks and water loss, this will in turn set forth improvements in water reliability. The less pumping needed leaves the water supply in storage and extends the supply in the local aquifer/groundwater systems.

12. What is the extent to which your water conservation activity addresses one of more of the following: :

Water supply shortages

Reliance on non-renewable water supplies

Groundwater depletion

Water quality issues

Describe: : The City is located in the Prescott AMA, with an assured water supply that is continually being over pumped. This conservation activity will affect potential water supply shortages, groundwater depletions, and water quality issues. The Prescott AMA has been defined as out of safe yield, therefore any conservation activity will reduce the load on current supplies. Significant outreach and education will provide customers with access to a cellular application providing near-real time data to determine their water usage. Smart technology alerts users to abnormal activity, providing the ability to detect and fix leaks before they become larger. Once this program is completely implemented, the City should see the per capita usage continue to decrease.

13. How will your water conservation activity align with a local, regional, or statewide water plan or integrated resource management plan? : The AMA that the City is in is subject to decadal management plans. Currently, the fourth management plan is in effect, however, the fifth management plan will commence in 2025, with additional water conservation requirements. The City sees AMI as one of the leading efforts to advance the community's

conservation and protect the local groundwater supplies. The City is pursuing its General Plan update which includes a water resources element, specifically working to not only produce a plan but have ongoing implementation efforts. This program will also be flexible enough to add water quality monitors that can collect real-time data for water quality parameters such as chlorine concentration, pH, and turbidity. The new system encourages the population to reduce their water usage by providing more data for their consideration.

14. What are the costs and benefits of your water conservation activity, including any environmental impacts? : The costs of the AMI system include the meter cost, installation, commissioning, routine maintenance, and the cost to maintain the program such as internal training, planning, and data extraction. The benefits of this conservation activity include reduced operations cost, by not having employees physically reading meters. In addition, the installation of the AMI system can save customers money if a leak is detected and alerts the customer before the bill. The sooner a leak is fixed, the less a customer will be billed for the excess water usage. The benefit seen in the reduction of water use is projected in multiple ways: 1. Water conservation will not only reduce the amount of water being used which conserves water for future use but also means less water is brought back through the effluent system which requires treatment before discharge. 2. Reduction in treatment cost is comprised through reduced use of electricity, fuel, and chemicals during the treatment process. Energy saving can be made through better understanding of water consumption patterns that allow timing and optimization for pump stations and water tank filling to lower energy price tiers. 3. The overall water infrastructure will benefit from reduced water usage which will extend the lifespan of these systems. 4. The environmental impact is through less pumping of groundwater which is retained in the aquifer. With the recent droughts and water shortages throughout the state, all water saving activities benefit preserving water supplies.

15. How will you measure the effectiveness of the conservation activity? : The effectiveness of the AMI system can be measured directly from the large amount of data that will be collected from the system which will allow data-driven decision making. The data derived from the smart meters will provide direct indication of customer water usage during drought conditions, at different times of the day and year. The evaluation of this data will benefit water conservation strategies by showing direct indicators of water usage. The metric of water saved, after implementation, is the most obvious indicator of program effectiveness but not the only one. Once the AMI system is installed, a Utility Billing customer has the option to download, in electronic format, an application to see their data. The City anticipates that conservation will be gained by allowing a customer to see their monthly water usage. During summer months, there is a spike in irrigation water, which is expensive potable water; the typical customer may be unaware of how much extra water is being used. The customer will also be able to detect leaks quickly, reducing waste, and letting the customer know when corrective actions need to be taken. Providing customers with this tool and information will allow them to gauge their own water usage and make choices that provide the most benefit. The City's Gallons per Capita per Day (GPCD), a measurement of how much water each customer uses each day, is a direct measurement of the City's water conservation efforts. It is projected that GPCD will decrease as customers recognize and try to reduce their usage.

III. Funding Sources

16. If your water conservation activity is eligible for funding from WIFA's Long-Term Water Augmentation Fund or Water Supply Development Fund, does the nature of your conservation activity make funding from those funds impractical, and why? : The City recognizes that there is a link between this grant opportunity and the Water Supply Development Fund, yet at this time, is only seeking this grant to help get the AMI program started. The City does not meet the current qualifications for the Long-Term Water Augmentation Fund.

17. Would the conservation activity be otherwise implemented without this grant funding? Explain. : AMI is a significant investment for the City and will take many years to fund it, in its entirety. The City has committed to completing this program regardless of outside funding; this grant assistance will help the City reach important milestones sooner to ensure this investment comes to fruition system-wide in the shortest timeline possible.

18. To what extent will your water conservation activity maximize or leverage multiple available funding sources, including federal funding? : Prior to the grant opportunity, the City added the WMRP to the annual Capital Improvement budget for the next five fiscal years. The program is currently only using water users' rates and fees for funding; however, during the duration of the program, the City will continue to look for any grant assistance possible.

19. Are there cost-sharing opportunities with other applicants or other parties? Explain. : This program does not include any cost-sharing opportunities as the program only affects the customers of the water utility. If other funding opportunities come to light, the City will aggressively pursue those options.

20. What is the source and amount of the match (including in-kind match)? : The source of the match comes from the City's water users' rates and fees. The City is requesting a $3,000,000 grant, with a match of $750,000 or 25%, to implement phase 1 of the WMRP. The program in its entirety has a cost estimate of $12,500,000.

IV. Capacity, Feasibility, & Public Comment

21. What qualifications and capacity do you have for completing your proposed water conservation activity? Include any past managerial deficiencies and provide the name(s) and qualifications of the individual(s) or entities who will be managing this activity. : The project manager is Steven Olfers, the City's Utilities Manager BS, MPA (Resume is attached). Mr. Olfers began with the City in June 2022, prior to his move, he was the Water/Wastewater System Superintendent for the City of Mesa for 4 years. Mr. Olfers will be assisted by Nathan Graham, the City's Water Division Superintendent. Mr. Graham has worked for the City's Water Division for 8 years. External vendors including the meter manufacture and installation services will lead the field efforts.

22. Will there be significant management impacts as the result of the proposed conservation activity, or any technology associated with the conservation activity? (For example: additional costs or staffing requirements) : The management impacts will be minimal; the new system will reduce the amount of labor hours employees are currently needing to manually read water meters each month. Technology will be self-contained. Communication devices installed with the meters will send data through the cell phone system to a central server. The server will evaluate the data using proprietary software and identify the change of state of all readings. Any measurements that are outside of the set parameters will be sent through email to be evaluated by the project management team. The only technology that will require maintenance will be the endpoints associated with the individual meters, which have a 10-year battery life. The software from the vendor will then communicate with the customer portal, providing near real-time data.

23. Will the proposed conservation activity promote collaborative partnerships to address water-related issues? Explain. : The WMRP will promote collaborative partnerships with the new AMI equipment. The implementation of the AMI system goes seamlessly into the continuous efforts of the City to promote and educate the community on water conservation practices. Partnerships with local organizations that promote water conservation and water quality for the health of the local streams, lakes, and aquifer are perfect collaborative partners to promote the use of smart meter technology for the benefit of the water system. The City's General Plan provides the overarching goals of strengthening water conservation, water quality, and water supply to the community through development of a long-term water plan. The implementation of the long-term water plan requires collaboration with community stakeholders, the AMI system is one of key components that brings this collaboration together. It is anticipated that outreach efforts will be put in place to bring in many more organizations, groups, and stakeholders.

24. What is the stakeholder involvement in the conservation activity planning process? : In 2019, the City of Tempe was the first metropolitan community to introduce and install AMI it to their community. Earlier this year, the City contacted them to learn both their successes and challenges in stakeholder involvement. The City's water service area includes not only those in City limits, but also Yavapai-Prescott Indian Tribe, portions of the Town of Chino Valley, and portions of Yavapai County. A comprehensive outreach plan will be implemented to achieve the possible efficiencies the City described in Question 6. The City's plan will include 3 stages and several communication tools to reach various types of customers and stakeholders. The first stage will be to train in-house staff to assist customers with this technology. Secondly, the City will be informing water customers about the AMI user-interface, generating excitement about the use, and how it could save them money. Lastly, the City will publish the registration/sign-up procedures for the user-interface.

25. Will the proposed conservation activity include public outreach and opportunities for the public to learn about the conservation activity? Explain. : The City launched a new website in Spring 2023, prescottwater.com, devoted entirely to water conservation. It includes information on how to save water indoors (kitchen, bathroom, laundry) and outdoors (primarily irrigation). In just over a month, almost 1,000 users have signed into the website, this shows just how much the citizens are invested in water conservation. This website will be one of many forms of communication methods the City will be using. The City will also be utilizing press releases, local newspapers, billing leaflet, multiple social media platforms, advertising in selected publications, and public events. The City has several local water conservation groups that will be contacted for public outreach. City Council Study Sessions will take place to educate the public and the City Council.

26. Is there community and/or sector support for the conservation activity? Explain. : The City has great support by community groups interested in heightened conservation practices in both indoor and outdoor water use. Attached with this application are letters of support from some of our community partners.

27. How feasible is it to complete your water conservation activity? Explain. : The City has made the financial commitment to ensure the completion and success of this program, meaning this program will move forward to completion as a part of the 5-year Capital Improvement Program. Throughout the country many communities have implemented AMI systems to promote water conservation, extend the life of water infrastructure, and optimize water supplies. The City, through a request for proposals process, will collaborate with a strong AMI vendor that has experience with installation and commissioning of the meters as well as software components. The vendor will provide the support and training to create a successful program.

28. If the conservation activity is a continuation of ongoing activities, has the activity been shown to be effective? If a new activity, has the proposed project, technology, or technique previously been implemented? : This is a new program the City is undertaking. Nearby towns have had success in the implementation of this program as well as those across the country. There has not been a smart meter program in the City previously, however, with the evolution of communication technology this program will advance the smart city ideals allowing customers and utility staff to work together to find solutions for water loss and water quality issues that continue to challenge the utility system.

29. Will the proposed conservation activity implement an established Best Management Practice? Explain. : This program is a Best Management Practice (BMP) within the ADWR Prescott AMA Fifth Management Plan (see Question 13). The City recognizes, from case studies, that AMI is the next step in water conservation. Under the regulation of ADWR and the City's adoption of other BMPs, the City has seen the community's GPCD drop significantly (attached chart Fig. 7).

Additional Supporting Documentation (pdf, jpg, word, excel) : CWAG Letter of support 5.16.23.pdf

Additional Supporting Documentation (pdf, jpg, word, excel) :

Additional Supporting Documentation (pdf, jpg, word, excel) : Question 13 Image.docx

Additional Supporting Documentation (pdf, jpg, word, excel) : Question 29 Fig 7.docx

Additional Supporting Documentation (pdf, jpg, word, excel) : Steve Olfers Resume.doc

Average Score :

# of Reviews : 0

# of Denials : 0

Please use the following link to view the Budget

Budget Worksheet :

View Budget Worksheet : https://portal.ecivis.com/#/peerBudget/02A7FD05-9BB4-4A9A-88EB-65FBF400F755

Application Goals :

View Application Goals : https://portal.ecivis.com/#/peerGoals/99544009-DFA4-4D53-9CFF-FB9813569098

Created by : zengine+36768@srm.ecivis.com

Record ID # : 50209390

Last change : 2023-05-18T23:49:56+0000

Citizens Water Advocacy Group

PROTECT OUR WATER

cwagaz.org

May 16, 2023

City of Prescott
City Hall
201 N Montezuma St
Prescott, Az 86301

To Mayor and Council, City of Prescott:

The Citizens Water Advocacy Group (CWAG) is a 300-member nonprofit organization that, since 2002, has pursued its mission of protecting the water supply of the Prescott Active Management Area and the base flow of the upper Verde River.

CWAG fully supports the application of the City of Prescott for WIFA grant funding to offset the cost of the City's Water Meter Replacement Program. This program enhances the city's existing efforts for water conservation and represents an important and essential step in achieving greater efficiency of water use in Prescott.

Yours sincerely,

Gary Beverly, Gordon Bond, Deborah Thalasitis, Edward Wolfe
Executive Committee
Citizens Water Advocacy Group

PO Box 13145 • Prescott, AZ 86304 • www.cwagAZ.org • info@cwagAZ.org

3.2 Meter Repair or Replacement Program		
1 point	Water providers implement a program to systematically assess the meters or submeters in their service area to identify malfunctioning meters and to repair or replace them.	Water providers must submit with their CER a description of the program including the replacement cycle of meters and the number of meters repaired or replaced each year.
3.3 Advanced Metering Infrastructure (AMI) Installation		
2 points	Water providers or designated representatives plan and install advanced metering infrastructure (AMI) throughout the service area. Providers may also retrofit automatic meter reading (AMR) to AMI.	Water providers must submit with their CER the number of units installed and/or retrofitted per year. Providers can receive credit for this measure a maximum of 5 years or until the AMI system is fully installed, whichever is less. Water providers cannot get credit for this BMP and BMP 3.4 in the same year.

3.4 Advanced Metering Infrastructure (AMI) Maintenance and Utilization		
2 points	Water providers or designated representatives maintain the physical AMI system and related software. Providers shall utilize the AMI data to provide services such as high-water consumption and/or leak alerts.	Water providers must submit with their CER the total number of AMI units currently operational, the total number of AMI units that were repaired or replaced, and a list of services utilizing AMI data. Water providers cannot get credit for this BMP and BMP 3.3 in the same year.

Steven D. Olfers
1481 Sundog Ranch Road
Prescott, AZ 86301
Cell: (602) 402-1970
E-Mail: solfers@yahoo.com
Steven.olfers@prescott-az.gov

Education:

Bachelor of Science in Microbiology Minor Chemistry, University of Arizona, Microbiology Department, Tucson, Arizona; May 1993.

Master of Administration, emphasis Public Administration, Northern Arizona University, May 2019

Professional Certifications:

ADEQ Grade IV Wastewater Collection System Operator; # OP023273
ADEQ Grade IV Wastewater Treatment Plant Operator; # OP023273
ADEQ Grade IV Distribution System Operator; # OP023273
ADEQ Grade IV Water Treatment Plant Operator; # OP023273

Employment History:

June 2022- current: Utilities Manager, City of Prescott, Public Works Department, Prescott AZ

- Lead the Water Utilities Team in the daily operations of a large water and wastewater utility serving nearly 50,000 customers in two population centers.
- Manage the operations of two Wastewater facilities, 8 wells and accompanying distribution and collection systems.
- Work with Public Works and City Management as well at the City Council to ensure the Utilities group is meeting and exceeding the priorities of the city.
- Collaborate with City and Public Works Engineering and Development teams to ensure that development and rehabilitation work advances the Vision and Mission of the City.
- Manage a over $10 Million Operations as well a $60 million Capital Improvement Program budgets.
- Interact with other Utilities departments throughout the region.
- Member of the AWWA Operator Forum Sub-committee.
- Member of the City Executive Safety Committee
- Member of the City Emergency Management Team

June 2019-May 2022: Water Superintendent, City of Mesa, Water Resources Department, Mesa AZ

- Lead a multi-disciplinary team to maintain and operate the Remote Facilities, Collection and Distributions sections in daily operations.
- Supervised 6 Direct and 65 in-direct reports in daily operational tasks.
- Collaborate with Water Department Engineering to ensure all operational parameters are met for new and rehabilitated facilities throughout the service area.
- Interact with Water Department and City Management to ensure budgetary concerns are addressed.

- Interact with customers to allay their concerns and work to resolve claims against the City related to Water System concerns.

May 2015 – June 2019: Water Facilities Supervisor, City of Phoenix, Water Services Department, Water Production, Phoenix, Arizona

- Lead a team of multi-disciplinary professionals to maintain operation of all mechanical, electrical, and operational capability of the Water Department's critical infrastructure.
- Operate and maintain multiple water treatment facilities providing safe drinking water to 1.5 million customers. Plants managed include 100 MGD Deer Valley and 100 MGD 24th St WTP and Remotes South Yard (157 sites).
- Efficiently operate and control spending of assigned budget
- Manage employee resources of up to 8 direct reports and 60+ indirect reports.
- Maintain all maintenance records through a CMMS (WAM) work order system.
- Lead Remotes section in interacting with the engineering section to ensure proper scheduling of maintenance and replacement processes to ensure infrastructure reliability.
- Operate all facilities within Federal, State, County and Local regulations.
- Member of Water Department Chlorine Committee
- Member of Water Department Reliable Infrastructure Committee
- Member of Water Department Chlorine Training Sub-Committee

March 2012 – May 2015: Water Services Process Control Specialist, City of Phoenix, Water Services Department, Water Production, Phoenix, Arizona

- Provide critical thinking to the analysis of chemical and biologic sample results to operate a 220 MGD water treatment facility that provides drinking water to the cities of Mesa and Phoenix, Arizona, serving a population of nearly 1.5 million residents.
- Accurately track and report to supervision any anomalous results that would threaten the health of our customers.
- Direct and authorize chemical changes to the water treatment process to provide the best drinking water possible.
- Track and manage costs of chemicals to maintain an efficient and cost-effective water treatment process.
- Provide decisive direction to plant supervision for any challenge in the water treatment process during the 24 hour, 7 days a week operation.
- Produce written operational reports, daily, weekly, monthly and yearly informing supervision of the water plant processes.
- Effectively communicate complex ideas on water treatment process to all levels of expertise in the water treatment industry.
- Understand and comply with all Local, State and Federal regulations affecting the water treatment process and communicate with regulators on any compliance issues.
- Operate 24 on-site water treatments systems throughout the city including 19 Granular Ferric Hydroxide Arsenic treatment and blending systems, 2 Aeration systems for removal of VOC contaminates, 2 Aquifer Recharge wells and 1 Granular Activated Carbon VOC removal system
- Supervise a team of O&M Technicians in the maintenance of all on-site treatment systems.
- Work directly with management in developing unique and innovative solutions to challenges associated with the operation of a large, dynamic water distribution system.

Additional Professional Training:

Proficient in Microsoft Suite products, including Word, Excel, Publisher, Access and PowerPoint and SAP and internet applications.

Completion of Inspiring Leader Training and Phoenix Water Smart Supervisor Training

Completion of the City of Mesa Management Program

Arizona National Guard, E-5 Sargent, 1989-1993

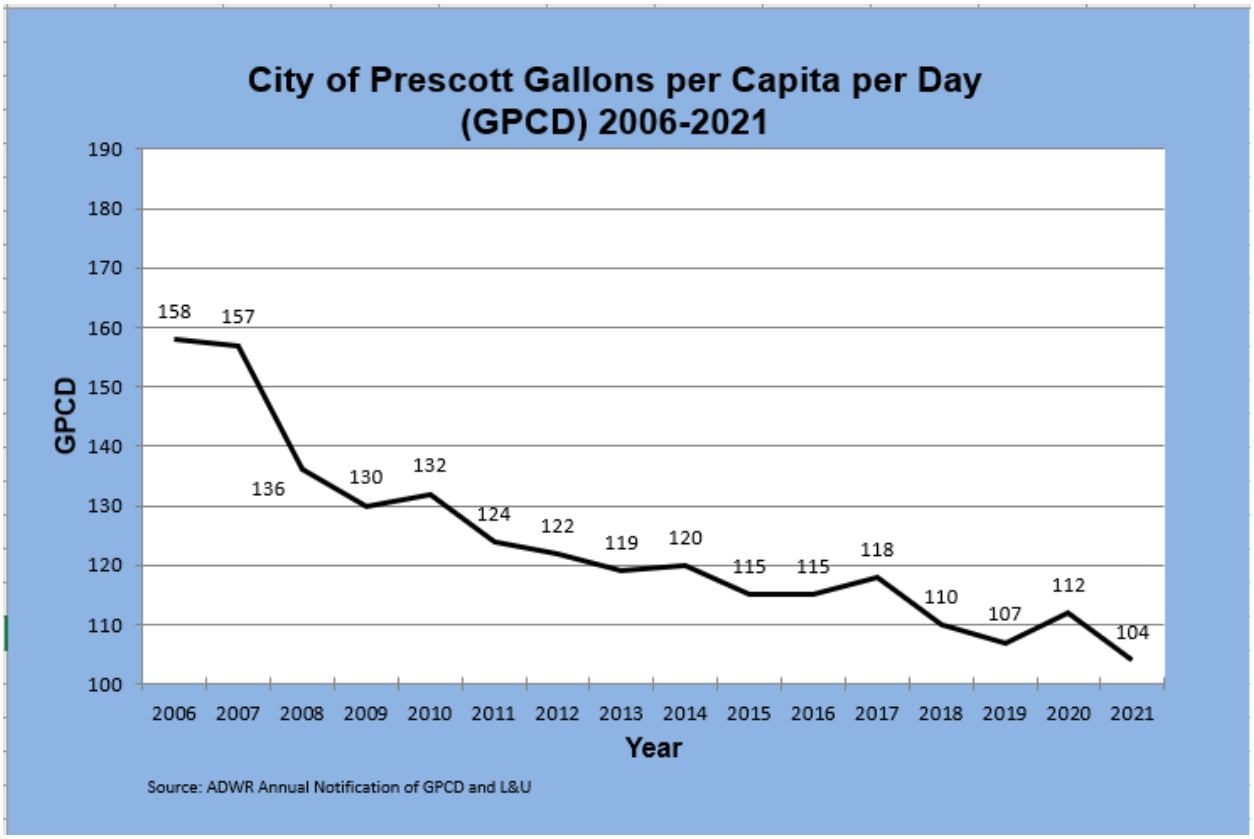
City of Prescott Gallons per Capita per Day (GPCD) 2006-2021
GPCD
190
180
170
160
150
140
130
120
110
100
158
157
136
130
132
124
122
119
120
115
115
118
110
107
112
104
2006
2007
2008
2009
2010
2011
2012
2013
2014
2015
2016
2017
2018
2019
2020
2021
Year
Source: ADWR Annual Notification of GPCD and L&U

Water Conservation Grant Fund Application Evaluation
Round 1

City of Prescott – Water Meter Replacement Program	**WC1-040-2023**
Grant Amount	$3,000,000.00
Category	Advanced Meters
Summary	The grant monies will be used to begin the first phase of the City's five-year Water Meter Replacement Program (WMRP). This program will replace every water meter with an AMI, a robust form of water metering technology that allows direct transmission of water use data, to the utility company. AMI improves the ability to collect accurate water usage data to improve billing, leak detection, and water resource management. The technology has now reached competencies that allow for communities, with terrain similar to the City's, to participate within more acceptable cost levels. AMI allows real time reads, using cellular technology, to transmit to the database. With this type of communication, the customer can download a cellular application to access their live usage reads. The advanced equipment will alert the customer and the city alike of any unusual activity that may occur within their household piping system. The new transmitting devices would allow leaks to be detected up to 30 days sooner than current equipment permits. The software that accompanies this program would instruct customers where and how to look for leaks and provide other techniques for reducing water loss. Customers will be able to access their water usage daily and avoid potentially losing thousands of gallons of water per incident. Since this data is available to the homeowner and the city, leak alerts will be transmitted within 6 hours of a high-flow incident, allowing correction of the water loss.
Location	City of Prescott, Yavapai County
Estimated water savings in acre-feet per year	405
Duration of project/program	The exact duration of program not specified, however applicant noted this would be for the first phase of the City's five-year Water Meter Replacement Program (FY 2024 -FY 2029) Applicant estimated the useful life of the meters is 10-12 years and the electronic communication devices is up to 20 years.

Conservation Activity Benefits and Results
Statutory Evaluation Criteria #1, #2, and #4

Activity Type	Programs and projects that reduce water use Per A.R.S. 49-1332(B)(2)

Water Conservation Grant Fund Application Evaluation
Round 1

Source of water	This area consists of two groundwater sub-basins within the Prescott Active Management Area (AMA), the Little Chino Sub-Basin and Agua Fria Sub-Basin. The City's wellfields water source is produced from the Little Chino Sub-basin aquifer system.
Community information	The current municipal boundaries of Prescott encompass an area of approximately 45.6 square miles with a population of 45,827 as of the 2020 decennial census. The City is the base of Yavapai County government operations. Located in the mountains of north central Arizona approximately 95 miles northwest of Phoenix (the State capitol) and 90 miles southwest of Flagstaff, the City borders the Prescott National Forest to the south and west. The average elevation is 5,400 feet. As of the census of 2020, the population density was 1,019 people per square mile (353.5/kmÂ²). The racial makeup of the city was 84.4% White, 0.4% Black or African American, 0.6% Native American, 2.0% Asian, 0.2% Pacific Islander, 4.2% from two or more races and 8.6% of the population were Hispanic or Latino. In the city, the population was spread out with 20.12% under the age of 24, 13.8% from 25 to 44, 27.31% from 45 to 64, and 38.77% who were 65 years of age or older. The median age was 59 years. Females make up 51.08% of the population and males are 48.92%.
Costs and benefits of project/program	The costs of the AMI system include the meter cost, installation, commissioning, routine maintenance, and the cost to maintain the program such as internal training, planning, and data extraction. The reported benefits of this conservation activity include reduced operations cost, by not having employees physically reading meters. In addition, the installation of the AMI system can save customers money if a leak is detected and alerts the customer before the bill. The sooner a leak is fixed, the less a customer will be billed for the excess water usage. The claimed benefits seen in the reduction of water use are projected in multiple ways: 1. Water conservation will not only reduce the amount of water being used which conserves water for future use but also means less water is brought back through the effluent system which requires treatment before discharge. 2. Reduction in treatment cost is comprised through reduced use of electricity, fuel, and chemicals during the treatment process. Energy saving can be made through better understanding of water consumption patterns that allow timing and optimization for pump stations and water tank filling to lower energy price tiers. 3. The overall water infrastructure will benefit from reduced water usage

	which will extend the lifespan of these systems. 4. The environmental impact is through less pumping of groundwater which is retained in the aquifer. With the recent droughts and water shortages throughout the state, all water saving activities benefit preserving water supplies.

Funding Sources
Statutory Evaluation Criteria #3 and #5

Eligibility for LTWAF or WSDF	The Applicant recognizes that there is a link between this grant opportunity and the Water Supply Development Fund, yet at this time, is only seeking this grant to help get the AMI program started. The City does not meet the current qualifications for the Long-Term Water Augmentation Fund. While they assess that they are not eligible, WIFA staff finds that they would meet WSDF eligibility. It is unclear whether this type of conservation program would be feasible with a repayment obligation under the WSDF.
Leverage of multiple funds	Prior to the grant opportunity, the City added the WMRP to the annual Capital Improvement budget for the next five fiscal years. The program is currently only using water users' rates and fees for funding; however, during the duration of the program, the City will continue to look for any grant assistance possible.
Source of funding and match	The source of the match comes from the City's water users' rates and fees. The City is requesting a $3,000,000 grant, with a match of $750,000 or 25%, to implement phase 1 of the WMRP. The program in its entirety has a cost estimate of $12,500,000.

Capacity, Feasibility, & Public Comment
Statutory Evaluation Criteria #6, #7, and #8

Qualifications and capacity of applicant	The project manager is Steven Olfers, the City's Utilities Manager BS, MPA (Resume is attached). Mr. Olfers began with the City in June 2022, prior to his move, he was the Water/Wastewater System Superintendent for the City of Mesa for 4 years. Mr. Olfers will be assisted by Nathan Graham, the City's Water Division Superintendent. Mr. Graham has worked for the City's Water Division for 8 years. External vendors including the meter manufacture and installation services will lead the field efforts.

Water Conservation Grant Fund Application Evaluation
Round 1

Feasibility of project/program	The City has made the financial commitment to ensure the completion and success of this program, meaning this program will move forward to completion as a part of the 5-year Capital Improvement Program. Throughout the country many communities have implemented AMI systems to promote water conservation, extend the life of water infrastructure, and optimize water supplies. The City, through a request for proposals process, will collaborate with a strong AMI vendor that has experience with installation and commissioning of the meters as well as software components. The vendor will provide the support and training to create a successful program.
Public comments	The City has great support by community groups interested in heightened conservation practices in both indoor and outdoor water use. Attached with this application is a letter of support from some of one community partner.

Technical Review:

The Applicants has a **current SAM.GOV UEI #** which allows them to apply for federal funds.

The applicant has completed all steps in the grant application process and is requesting funding for a project / program that is acceptable under the regulations. The AMI water meter system will help to improve water system management, account for, and thereby reduce water losses and is very good technology for water conservation and finding leaks immediately.

Automatic AMI / AMR Metering Infrastructure:
A recent AWWA study finds that water consumption feedback informed by AMI data and facilitated by a SmartH2O digital platform is associated with substantial water savings of about 8% in the long term. Normal studies show anywhere from 2 to 10% water savings with AMI/AMR water meters.

Expenditure Code 5.8 Clean Water: Water Conservation

ARPA Final Rule (31 CFR Part 35 RIN 1505–AC77) defines water infrastructure projects as "eligible projects under the Clean Water State Revolving Fund." "A project shall meet the criteria of CWSRF eligibility found in Section 603(c) of the Clean Water Act (CWA)". Specific Expenditure Codes were created to define activities available under the water infrastructure category.

The Interagency Service Agreement (ISA-ARPA-WIFA-070122-01) between the State of Arizona, Office of the Governor and WIFA required the project / program be specific to Expenditure Code 5.8 Clean Water: Water Conservation.

Water Conservation Grant Fund Application Evaluation
Round 1

WIFA staff find this project / program is consistent with Expenditure Code 5.8 Clean Water: Water Conservation as determined in Section 603c of the Clean Water Act (CWA) and the ISA.

Attachments:

- City of Prescott Application - WC1-040-2023
- Budget
- Letters of Support, Recommendations, and Water Savings Information

Evaluation Criteria Statutory Reference:

49-1334. **<u>Evaluation criteria for water conservation programs and projects from the water conservation grant fund; procedures</u>**

The authority shall determine the order and priority of water conservation programs and projects proposed to be funded in whole or in part with monies from the water conservation grant fund based on the following, as applicable:

1. The extent to which the water conservation program or project achieves one or more of the results prescribed by section 49-1332, subsection A.
2. The costs and benefits of the water conservation program or project, including environmental costs and benefits.
3. If the water conservation program or project is eligible for funding from the long-term water augmentation fund established by section 49-1302 or the water supply development revolving fund established by section 49-1271 and if the nature of the water conservation program or project makes funding from the long-term water augmentation fund or the water supply development revolving fund impractical.
4. The ability to provide multiple benefits.
5. The degree to which the water conservation program or project will maximize or leverage multiple available funding sources, including federal funding.
6. The qualifications and capacity of an applicant.
7. The feasibility of the water conservation program or project.
8. Public comments.

WCGF Committee Evaluation:

☐ Recommend Rejection of Grant Application

☐ Recommend Approval of Grant Application

☐ Recommend Approval of Grant Application with Modifications

Tab 10

AGENDA ITEM:

Recommend Approval of Grant Application WC1-045-2023 – San Carlos Irrigation and Drainage District – WCGF – $555,658.40

ACTION REQUIRED:

Review, Discuss & Recommend Approval

PREVIOUS ACTION:

None

STAFF CONTACT:

Lindsey Jones

RECOMMENDED DISCUSSION TIME:

5 Minutes

ATTACHMENTS:

- Grant Application WC1-045-2023 – San Carlos Irrigation and Drainage District
- Water Conservation Grant Fund Evaluation

STAFF COMMENTS:

None

SCIDD Phased System Improvements Program: Little Mountain Spill Water Conservatory Project

Profile : shane.lindstrom@scidd.com

Entity Name: : San Carlos Irrigation and Drainage District

I. General Information

1. Title of Project: : SCIDD Phased System Improvements Program: Little Mountain Spill Water Conservatory Project

2.Type of Conservation Activity (A.R.S. § 49-1332(B)): : Programs and projects that reduce water use Per A.R.S. 49-1332(B)(2)

Note: for the purpose of the application, the term project and program will be referred to as “conservation activity”

3. Is this for an individual Water Conservation Project or a general Water Conservation Program? : Water Conservation Programm

Please describe the specific components that make it a program. : In early 2010, SCIDD and its District engineer (George Cairo Engineering, Inc.) completed the planning and development to initiate the District’s Master Plan for Phased System Improvements Program with specific goals to improve system operations and service, reduce overall maintenance costs, and conserve water for drought resiliency. The project was broken up into logical phases that include Reaches 1 through 4 and then continues with the Reach 5 the system laterals. This system-wide rehabilitation and modernization project began construction with limited Federal funding later in 2015 and was estimated to last over a decade. Aspects of the phased system modernization improvements have included: • Rehabilitation and modernization of the Ashurst-Hayden Diversion Structure • Construction of a settling basin at the headworks • Construction of sediment handling facilities. • Concrete lining of the Reach 1 Florence-Casa Grande about 3-miles with new flow control check structures, turnout structures, and flow measurement. • Concrete lining of Reach 2 the Florence Canal 10-miles with new flow control check structures, turnout structures, and in-line bridges. This project is currently under construction to be completed in the summer of 2023. • Currently completing environmental update and design of Reach 3 planning and design of 10-miles of canal lining and in-line structures and a system regulation reservoir. • The proposed Water Conservatory Project, the Little Mountain Spillway improvement project site resides in Reach 4 towards the end of the planned system-wide improvements. Little Mountain Spillway inlet structure, identified as the system’s primary spill location, negatively impacts SCIDD’s operations due to its limited operational and maintenance capabilities which results in poor manual operation and water losses. Access to the site is troublesome and unsafe at times, and losses are significant and difficult to control with the 100-year-old manual structure that has exceeded its design life. During monsoon storm events or other operational scenarios, it is very difficult to operate and control spills with the use of manually placed wooden weir boards, this creates excessive spills and places the canal system at risk of failure due to overtopping. SCIDD has no means by which to recover flows sent down the spillway. This project will help to preserve spills and put them to beneficial use. Therefore, minimizing the spill equates to additional irrigation water that can be allocated elsewhere within this reach of the SCIDD canal system. There are approximately twelve customers that are served

downstream of the spill site, but beyond these service points the water cannot be recovered by SCIDD. The planned next phase of the Little Mountain spill improvements will include some regulatory storage using data collected from the Water Conservatory Project that will expand the operational benefits and conserve more water.

4. What is the location of conservation activity?

City: : Florence

County: : Pinal

Program/Project Congressional District (check all that apply) :

2

5

Program/Project Legislative District (check all that apply) :

15

16

Watershed : Eloy Watershed

Active Management Area (if applicable): : Yes, AMA 6

Irrigation Non-Expansion area (if applicable): :

5.Conservation Activity Cost

Amount requested from the WCGF for this activity: : $555,658.40

Amount of matching funds: : $138,914.60

Total conservation activity cost: : $555,658.40

When applying for the grant, note that a single water conservation program grant may not exceed $3,000,000. A single water conservation project grant may not exceed $250,000. The WCGF requires at least a twenty-five percent match for each water conservation program or project.

6. What is the estimated water savings in acre-feet per year? : 5,792

Explain calculation: : There is only one system primary spill location in the San Carlos Irrigation and Drainage District, the Little Mountain Spill from the Casa Grande Canal south of the City of Casa Grande, Arizona. The current losses experienced at the Little Mountain check and spillway location are approximately 7,240 acre-feet per year. Current losses have been calculated using an average of daily field measurements taken at varying times of the

year. This average was then converted into an approximate constant spillage (existing) flow rate, in cubic feet per second, which was then converted into acre-feet per year. Spillage occurs about 300 days per year with spills as high as 20 to 25 cfs during higher flows and reduced spills during lower flow periods. The estimated water savings associated with the Little Mountain Spill Water Conservatory Project inclusive of modernized structures and installing a Rubicon Flumegate is approximately 5,792 acre-feet per year. The Rubicon FlumeGate will reduce losses to an approximate average flow rate of two cubic feet per second, with improved operations and water level control and measurement. The new spillage flow rate was then converted from cubic feet per second to acre-feet per year. Subtracting the new spillage flow rate from the existing spillage flow rate returns the estimated water quantity savings, in acre-feet per year. These calculations were verified by our District engineer George Cairo Engineering.

7. What is the expected duration of the conservation activity? : The three project elements including the check structure, spillway, and FlumeGates have a 25-year design life. Therefore, the expected duration of the conservatory activity is 25-years from date of installation. The San Carlos Irrigation and Drainage District Modernization Program which is Phased into system reaches and laterals includes the desired installation improvements at the Little Mountain Spill site in Reach 4 of the Program. The Water Conservatory Project includes concrete cast in-place structures needed to accommodate the new Rubicon gate and new canal gates. The Rubicon gate, canal gate and site appurtenances have a specified 25-year design life. All the concrete structural elements have a 50-year design life. Therefore, the expected duration of the conservatory activity is 25-years from date of installation for the Rubicon and canal gates, and 50-years for the structures.

II. Conservation Activity Benefits and Results

8. What is the water conservation activity you propose to fund with grant monies? Describe in detail. : Founded on July 16th, 1928, the San Carlos Irrigation and Drainage District (SCIDD) is a private company classified under Water Distribution or Supply Systems for Irrigation. Around fifty-thousand acres of non-Indian land is occupied by SCIDD, extending south from Florence, east to Coolidge, and west to Casa Grande in the Central Arizona Valley. With water sources coming from stored water from the San Carlos Reservoir and the Ashurst-Hayden Diversion Dam on the Gila River, the natural flow of the Gila River, groundwater within SCIDD lands, and Central Arizona Project (CAP) water for Gila River, SCIDD is responsible for ensuring that the water is shared equally throughout its district. SCIDD provides service to roughly 1200 farmers, collectively in a 50,000-acre service area growing crops which include cotton, alfalfa, and small grains. The district is operated with manual controls, has earthen canals that leak, and is very inefficient with high system losses. In early 2010, SCIDD and its District engineer (George Cairo Engineering, Inc.) completed the planning and development to initiate the District's Master Plan for Phased System Improvements with specific goals to improve system operations and service, reduce overall maintenance costs, and conserve water for drought resiliency. The project was broken up into logical phases that include Reaches 1 through 4 and then continues with the Reach 5 the system laterals. This system-wide rehabilitation and modernization project began construction with limited Federal funding later in 2015 and was estimated to last over a decade. Aspects of the phased system modernization improvements have included: • Rehabilitation and modernization of the Ashurst-Hayden Diversion Structure • Construction of a settling basin at the headworks • Construction of sediment handling facilities. • Concrete lining of the Reach 1 Florence-Casa Grande about 3-miles with new flow control check structures, turnout structures, and flow measurement. • Concrete lining of Reach 2 the Florence Canal 10-miles with new flow control check structures, turnout structures, and in-line bridges. This project is currently under construction to be completed in the summer of 2023. • Currently completing environmental update and design of Reach 3 planning and design of 10-miles of canal lining and in-line structures and a system regulation reservoir. • The proposed Water Conservatory Project, the Little Mountain Spillway improvement project site resides in Reach 4 towards the end of the planned system-wide improvements. Little Mountain Spillway inlet structure, identified as the system's primary spill location, negatively impacts SCIDD's operations due to its limited operational and maintenance capabilities which results in poor manual operation and water losses. Access to the site is troublesome and unsafe at times, and losses are significant and difficult to control with the

100-year-old manual structure that has exceeded its design life. During monsoon storm events or other operational scenarios, it is very difficult to operate and control spills with the use of manually placed wooden weir boards, this creates excessive spills and places the canal system at risk of failure due to overtopping. SCIDD has no means by which to recover flows sent down the spillway. This project will help to preserve spills and put them to beneficial use. Therefore, minimizing the spill equates to additional irrigation water that can be allocated elsewhere within this reach of the SCIDD canal system. There are approximately twelve customers that are served downstream of the spill site, but beyond these service points the water cannot be recovered by SCIDD. The planned next phase of the Little Mountain spill improvements will include some regulatory storage using data collected from the Water Conservatory Project that will expand the operational benefits and conserve more water. The elements associated with the Water Conservatory Project SCIDD Little Mountain Check and Spill Structures are summarized below: Little Mountain Spill Check Structure Removal/Replacement of the existing 100-year-old canal check structure and gates, and the spill structure is summarized below. The facilities have exceeded their design life and are in various conditions of failure, they leak, are manually controlled, and in need of immediate replacement. Work activities include the following: Canal Check Structure Removal/Replacement 1) Complete planning and engineering. 2) Environmental review and demolition planning. 3) Purchase gate and all ancillary materials to construct check structure, and roadway crossing. 4) Coordinate a water outage period with district operations. 5) Mobilize equipment for demolition and removal. 6) Install dirt plugs for nuisance water. 7) Demolish and remove existing check structure. 8) Prepare subgrade for new forms. 9) Construct forms, place pipe between headwalls, and coordinate concrete placement for new check structure. 10) Concrete placement and materials testing. 11) Removal of forms. 12) Installation of appurtenant features. Canal Spillway Structure Removal/Replacement 1) Complete planning and engineering. 2) Environmental review and demolition planning. 3) Purchase gate and all ancillary materials to construct spillway structure. 4) Coordinate a water outage period with district operations. 5) Mobilize equipment for demolition and removal. 6) Install dirt plugs for nuisance water. 7) Demolish and remove existing check structure. 8) Prepare subgrade for new forms. 9) Construct forms, place pipe between headwalls, and coordinate concrete placement for new check structure. 10) Concrete placement and materials testing. 11) Removal of forms. 12) Installation of appurtenant features. Canal Gate and Spill Gate Installation 1) Complete planning and engineering. 2) Purchase gates and all ancillary materials to install the gates. 3) Coordinate a water outage period with district coincident with structures. 4) Maintain dirt plugs for nuisance water. 5) Remove existing gate and salvage to district yard with structure removal. 6) Blast and clean surface of structure. 7) Make any adjustments to the structure as needed prior to gate installation. 8) Installation of new canal gates and Rubicon Flumegate. 9) Commission and approve gate installations. A chart summarizing the “Problems and Outcomes” of the Water Conservatory Project is attached.

9. What is the source of the water that will be conserved? If it is mainstem Colorado River water or Colorado River water delivered through the Central Arizona Project, please clearly indicate so. : The District receives water from the San Carlos Project Irrigation (Project). The Project delivers water to the District and to the San Carlos Irrigation Project – Indian Works (SCIP-IW), which also serves the Gila River Indian Community. This includes stored water behind San Carlos Reservoir, natural-flow water in the Gila River between the San Carlos and the project diversion at Ashurst Hayden Diversion, water from Project groundwater wells, and GRIC Central Arizona Project (CAP) water. There are five points where CAP water enters the irrigation project. This water is commingled with Project water, surface and groundwater described above, and is part of the water delivered through the District to Gila River. There are several sites where spills from District canals can occur; the Little Mountain Spill just south of Casa Grande spills frequently and is by far the largest and system’s primary spill location. It was determined that the rehabilitation of the spillway inlet structure would provide the largest gains in system-wide improvements for the least number of negative impacts to the continual operation of the system. The proposed Water Conservatory activities will aid in better management of these water supplies that will directly allow the preservation of groundwater and reduce reliance

on available Gila River surface water and water from the CAP. The District after implementation of this project with conserved project spill water can potentially reduce the call for CAP water from GRIC, as their preferred choice is to take Gila River and natural flows, then CAP water, all augmented with groundwater as needed to meet demands.

10. Describe the community (population size, demographics, principal economic activities, etc.) impacted by the conserved water. : San Carlos Irrigation and Drainage District is rich in productive soils and climate for agriculture and even richer in history. Native American Indigenous have called this District home for centuries, and the District inhabits the ancestral lands of the Hohokam and a monument to these great people at the Casa Grande ruins. Many remnants of Hohokam remain, today SCIDD's service area includes the Native population of the Akimel O'odham (Pima) and Piipaash (Maricopa) peoples in the Gila River Indian Community. With a history of being deprived of water, and fighting for water rights, it has made it harder for these communities to survive. SCIDD's service area population also includes a Hispanic population of 43.5%. These are low-income communities whose surrounding lands are major consumers of irrigation water are historically being considered less than equal as agricultural workers, which in turn causes economic poverty, increased substandard housing rates, and an increase in generational health issues such as diabetes as shown in the table attached. The importance of continuing to make efforts of conserving water within the SCIDD system is directly correlated in making efforts to fight poverty and advocate for the livelihood of these economically disadvantaged communities.

11. What is the extent to which your water conservation activity achieves one or more of the following (select all that apply): :

value1

value2

value3

Describe: : The Water Conservatory Project will result in the introduction of automation at the Little Mountain Spillway inlet structure that will enhance delivery through stabilization of canal water surface elevations. By using the new state-of-the-art in flow control, measurement, and SCADA control Rubicon FlumeGate as an active water surface level control device, the canal's operating level will be normalized, which will in turn normalize delivery flows along the canal resulting in steady, predictable delivery flows to the farmers served in this area of the District. This results in an Overall Reduction In Use with the of spills and reduced diversions from the Gila River, groundwater pumping, and CAP water use will be reduced through the life of the project. If coupled with a reservoir in a future phase, then we could eliminate virtually all spills if managed correctly. This also will correlate directly with overall system conveyance and Water Use Efficiency by reducing diversion volumes, leaving water both behind San Carlos Reservoir, and in the aquifer for later use and drought resiliency. As the system is further rehabilitated canal celerity will increase meaning flow changes will be more rapid due to the increased velocity of water and the modernization of the Little Mountain Spill will be even more vital. Also, by using the new Rubicon FlumeGate as an active water surface level control device as planned with the new gate, the canal's operating level will be normalized, which will in turn normalize delivery flows along the canal resulting in steady, and predictable delivery flows to the farmers served in this area of the District. Steady delivery flows result in better on-farm irrigation efficiencies resulting in less diversion of water supplies and groundwater pumping improving Water Supply Reliability. Water Supply Reliability will be improved substantially with the Water Conservatory Project by minimizing spill volumes, additional water will be left in the canal for beneficial use making the system more reliable, by making it available for increased distribution to SCIDD's customers. With the knowledge that there will be less waste at this location, the operator of this Division will call for less water to be allocated to this area, thereby allowing additional water to be used in other areas of the SCIDD system. Those supplies not used in our water deficient project, can remain behind the dam, and stored for future use, or not pumped and left in the aquifer for future use. Both resulting in long term water supply reliability enhancement, and a reduction in energy consumption for the project.

12. What is the extent to which your water conservation activity addresses one of more of the following: :

Water supply shortages

Groundwater depletion

Natural disasters that may impact water supply infrastructure

Describe: : The SCIDD Water Conservatory Project will benefit regional water supply shortages by reducing a portion of the diversions from the CAP for the GRIC with improved operational management and efficiency, less spills mean less diversion and less groundwater pumping, on this project an estimated 5,792 acre-feet per year. Improvements may also make it feasible to introduce other water supplies like treated effluent or municipal reuse water in parts of our system downstream of this project that would further help reduce diversion from the Gila River, reduce groundwater pumping, and reduce a portion of the GRIC CAP diversion. Currently project groundwater wells are used to meet irrigation service demands, and to supplement system conveyance losses, like the Little Mountain Spill. Reduced system spills and conveyance losses will result in less groundwater extraction to off-set losses, therefore reducing groundwater extraction, protecting, and helping the local aquifer. Protection of the groundwater aquifer and reduced pumping will preserve those groundwater supplies for future generations, or in the event of a natural disaster impacting infrastructure like the CAP conveyance, Hoover Dam, other element of the Colorado River System, provide water supply reliability. This is a major issue also tied to supply reliability with the local municipalities as reliable non-CAP supplies to the GRIC help with their independent water contracts.

13. How will your water conservation activity align with a local, regional, or statewide water plan or integrated resource management plan? : Our District implements a “Water Crisis Conservation Plan” which mandates that we periodically assess our water delivery system and identify problems or needs as we adapt to meet changing conditions, identifying new technologies and strategies. SCIDD works diligently to improve our irrigation system with very little funding and resources. This project was identified as a priority by SCIDD, and a preliminary design has been completed by George Cairo Engineering, Inc. (GCE) who specialize in irrigation district modernization. The phased project includes this Water Conservatory Activity the Reach 4 Little Mountain Spill Gate(s) and Check Structure Upgrades Project, that will help the District to not only improve daily functions, but aids in the District’s efforts to better manage water deliveries, lessen water loss due to spills and seepage, and to reduce groundwater pumping. The reduced pumping is in the Pinal Active Management Area (AMA) while being in compliance with the AZDWR’s Water Conservation Plan objectives, the Drought Contingency Plan which the District is a stakeholder, and the District and the project is in-line with the USDA NRCS 30x30 initiative in protecting 30% of all land and water by 2030. Additionally, this project falls in line with objectives stated in Section 9504(a) of the Secure Water Act (P.L. 111-11) and that align with priorities of the Biden administration, including E.O. 14008: “Tackling the Climate Crisis at Home and Abroad” and E.O. 13985: “Advancing Racial Equity and Support for Underserved Communities Through the Federal Government.”

14. What are the costs and benefits of your water conservation activity, including any environmental impacts? : The Water Conservatory Project cost is estimated to be about $596,000. With the current Climate Crises in the western United States and the Colorado River Basin Arizona is in an ongoing 20-plus year major drought, it is pertinent that the District conserve as much water as possible. Replacing deteriorating structures and manual outdated gates is a priority in the on-going efforts to modernize our District and conserve water becoming a more drought resilience Project, serving SCIDD and GRIC. This funding will help SCIDD to continue to be good stewards of our soil and water resources with the design and construction of the Water Conservatory Project and save about 5,792 acre-feet per year. Construction will help create jobs in the local depressed economy that has a high unemployment rate. After construction of the project the District will experience less spillage at the end of the system, that results in less expense for labor and equipment for maintenance currently required in the area. The project will result in better operational practices that will yield better service to farmers,

a better service level results in better crop production and additional on-farm water efficiencies. Improved operational flexibility through automated controlled gates, will result in less O&M time required to operate the site facilities, this includes a large, improved safety component when access to the site is needed to make an operational change but not possible during a monsoon event, or a haboob events that have been amplified by the drought and less vegetation in the desert. Quick remote adjustments will be able to be made to help all these factors and save water as part of the proposed investment. Environmentally, all efforts made to conserve water in the SCIDD system directly benefit conservation and protection of the Gila River, Pinal County, the Gila River Indian Community, neighboring Tohono O'Odham Nation, and the Colorado River Project. In addition to conserving water that can remain behind both San Carlos Lake or Lake Mead and all those environmental ancillary benefits, being able to reduce leakage and seepage from the SCIDD canal system works to reduce the abundance of noxious weeds that take over open areas of the District. Noxious weeds not only consume water that can be used for irrigation crops, but they steal nutrients from crops, and Irrigation workers must make extra efforts to remove these weeds, requiring driving on canal banks, along with burning of weeds. The reduction in burning of weeds and operational improvement will result in reduced use of vehicles on dirt roads reducing dust/air pollution that improves air quality, lung disease, and the use of fossil fuels. The wildlife in the general project area includes species such as the Lesser nighthawk, and the endangered burrowing owl. Arizona's state bird, the Cactus Wren, is also a year-round resident of the county. These species, to name a few, will reap the benefits of this project by having access to reliable water not otherwise put to beneficial use that makes the entire ecosystem flourish, and support a more biodiverse ecosystem.

15. How will you measure the effectiveness of the conservation activity? : The district will measure the effectiveness of the water conservatory activity by monitoring and measuring spills at the Water Conservatory Project (Little Mountain) and at deliveries and locations affected by the project comparing those flows to historical values calibrated to current conditions. In addition, in a similar manner groundwater monitoring of well energy consumption and flow meter data will be compared to historical values. This summary data will be collected and analyzed on an annual basis to previous data and used in decision making and adaptive management, and to gain support from District management to fund more improvements. This includes the planning and engineering to develop a cost benefit analysis for the water storage augmentation and construction of a reservoir either at the Little Mountain Spill, or a location upstream for maximum benefits. The District will also monitor O&M expenditures pre and post project.

III. Funding Sources

16. If your water conservation activity is eligible for funding from WIFA's Long-Term Water Augmentation Fund or Water Supply Development Fund, does the nature of your conservation activity make funding from those funds impractical, and why? : The San Carlos Irrigation and Drainage District is in a depressed economic condition and with the many challenges facing the District cannot afford to take on financial debt and needs to find ways to leverage their limited funding. Without cost share funding support from WIFA the District cannot complete the proposed project, nor the planned system modernization. Due to operational and financial impacts of the COVID 19 pandemic and the impeding major drought on the Colorado River, the district is not able to fund and implement the proposed water conservation activities.

17. Would the conservation activity be otherwise implemented without this grant funding? Explain. : No, without funding support from WIFA the District cannot complete the proposed project. Due to operational and financial impacts of the COVID 19 pandemic and the impeding major drought on the Colorado River, the District is not able to fund and implement the proposed water conservation activities.

18. To what extent will your water conservation activity maximize or leverage multiple available funding sources, including federal funding? : The District does not have a history of applying for grants and funding opportunities therefore unless we apply Drought Contingency Plan funds, we do not have funds to leverage against this grant funding. The District does plan on applying due to the need for upcoming Federal NOFO opportunities and it is

our hope in the future to leverage those funds with WIFA funds and maximize water conservation and drought mitigation to address the climate crisis impacts. The District is looking to continue our phased System Modernization Program for long term water sustainability and will look to leverage all feasible funding resources.

19. Are there cost-sharing opportunities with other applicants or other parties? Explain. : There are no cost-sharing opportunities identified at this time on this project. However, we intend to document the results of the project and use it to educate and develop stakeholder interest in the implementation of the larger District Modernization Program that will include similar improvements to system laterals to maximize long term drought resilience and protect and best manage our water resources.

20. What is the source and amount of the match (including in-kind match)? : All funds for the WIFA grant matching requirements will be paid directly with San Carlos Irrigation and Drainage District funds, and District in-kind services. In kind services are envisioned to include planning, design, construction support, and construction inspection activities.

IV. Capacity, Feasibility, & Public Comment

21. What qualifications and capacity do you have for completing your proposed water conservation activity? Include any past managerial deficiencies and provide the name(s) and qualifications of the individual(s) or entities who will be managing this activity. : The San Carlos Irrigation and Drainage District (SCIDD) is a private company classified under Water Distribution or Supply Systems for Irrigation. Around fifty-thousand acres of non-Indian land is served by SCIDD, extending south from Florence, east to Coolidge, and west to Casa Grande in the Central Arizona area of Pinal County. All facilities are maintained and operated by the District. The day-to-day management of the District, and operations and maintenance are managed by Shane Lindstrom, General Manager who will be responsible for oversight of the Water Conservation Activity for the District, and the requested WIFA grant. Construction activities will be performed by the District operation and maintenance staff that are experienced in the requirements of this project, including the removal and installation of canal gates and site work. Other work including structure replacements will be completed by Innova Water Construction, LLC, (INNOVA), an Arizona based firm that specializes in irrigation district related works. The District has historically used and will utilize George Cairo Engineering, Inc. (GCE) a local irrigation and water resources firm regionally recognized as experts in flow measurement, design, and modernization of irrigation systems. GCE will complete the technical services to include planning, design, and construction management. Work will be completed under the direction of George Cairo, Principal Engineer, and engineer of record for the District. Mr. Cairo is a Principal and co-founder of GEORGE-CAIRO ENGINEERING, INC. (GCE) and he has more than thirty years of experience in agricultural engineering, water resources engineering, and conveyance planning, design, and construction. He is responsible for the daily operations of the GCE Central Arizona Office and the Imperial Valley Office as well as providing project sponsor, and project/design management and engineering support as a member of multidiscipline teams on a variety of water resources, capital improvement, and conveyance projects. He has extensive experience in irrigation systems planning, design and operations, water resources engineering, supply and demand analyses, municipal and irrigation water conveyance and distribution, groundwater recharge, and water conservation. Furthermore, he has expertise in open channel design, pipelines, hydraulic structures, flow measurement, HEC-RAS steady, and unsteady state hydraulic modeling, irrigation reservoirs, on-farm irrigation systems, and agricultural water quality. As a principal engineer he is responsible for quality control and quality assurance reviews of all GCE Central Arizona and Imperial Valley project deliverables as well as development of firm design standards. Mr. Cairo is the district engineer of record for several irrigation, water, and power districts in Arizona and California and is recognized as an expert and leader in the protection and transition of irrigation districts associated with agricultural to urban land conversion, irrigation engineering, hydraulics, and water resources engineering.

22. Will there be significant management impacts as the result of the proposed conservation activity, or any technology associated with the conservation activity? (For example: additional costs or staffing requirements) : The planned Water Conservation Activities associated with this grant will not have an impact on District management, conversely it will simplify and help improve safety, reduce District personnel time and expense associated with the current facilities, and prevent water losses. The planned flow and spill monitoring is not envisioned to impact the District and will be offset by the reduction in canal bank time expended by operators currently. These costs include labor and fuel expenses in addition to wear and tear on equipment.

23. Will the proposed conservation activity promote collaborative partnerships to address water-related issues? Explain. : The proposed Water Conservation activity would allow for water savings to be maximized and utilized in support of future growth in a responsible manner. The District believes that the project will facilitate and help to promote collaborative partnerships, by using water and energy savings and improved service as an example of funded conservation results. In fact, the District is looking to develop a partnership with our growers to promote collaborative approaches to funding opportunities and implementation of District and on-farm Best Management Practices and use of modern technologies to best manage water resources. Future projects pertaining to this Program and System Modernization will increase the reach of the project and help to flourish partnerships with possible stakeholders like NRCS, USBR, SCIP BIA, Hohokam Irrigation and Drainage District, the University of Arizona CALS, developers, and local municipalities. In these times of climate crisis and major drought it is imperative that we use the challenges to unify and promote partnerships, where there may not have been reason to work together in the past, there are many reasons before us now.

24. What is the stakeholder involvement in the conservation activity planning process? : This project was developed with the involvement and input of local users and growers as the stakeholders in the District service area. The growers are the end users of the irrigation system and therefore, the better service level provided by the District directly correlates to improved water management on the farm. The funds approved for use with the WIFA grant funds will directly impact these stakeholders, therefore their involvement and input were important in the process. The District working collaboratively with our engineer and the farmers developed a master list of projects for consideration including conceptual cost benefits. This was followed by the development of a selection criteria matrix and application of the projects to the selection matrix resulting in the proposed project elements in this grant application. Future projects pertaining to this Program and System Modernization will increase the reach of the project and help to flourish partnerships with possible stakeholders like NRCS, USBR, SCIP BIA, Hohokam Irrigation and Drainage District, the University of Arizona CALS, developers, and local municipalities.

25. Will the proposed conservation activity include public outreach and opportunities for the public to learn about the conservation activity? Explain. : There is not a planned formal public outreach program however all activities and results will be posted on the District web page. This will include a project description, a summary of the Water Conservation Activities, performance goals, and of course the results of the work and water and energy savings achieved.

26. Is there community and/or sector support for the conservation activity? Explain. : Yes, the local farming community is in support of the proposed Water Conservation Activity. Please find attached letters of support from the local agricultural Community.

27. How feasible is it to complete your water conservation activity? Explain. : The project is 100 percent feasible and has been approved by the Board, see attached District Resolution. If approved for funding of the proposed Water Conservation Activity the District will be able to complete the work within 270 calendar days of grant execution and notice to proceed from WIFA. The District has coordinated with vendors for the purchase of the gates and valves which are long lead items to have readily available within the planned timeframe. Also concrete for the concrete structures is now readily available with the recent fly ash shortage issue locally resolved. The District has the labor resources to commit to the project and we have a commitment from our

engineer and contractor to support this important project. The District has contracted with George Cairo Engineering to complete a preliminary design for the Little Mountain Spill check and spill structures. SCIDD is an active irrigation project therefore construction is done in canal during water outage periods, the next canal dry-up is scheduled for November 2023 through December 2023. This is the time frame envisioned to complete the proposed Water Conservation Activity.

28. If the conservation activity is a continuation of ongoing activities, has the activity been shown to be effective? If a new activity, has the proposed project, technology, or technique previously been implemented? : The conservation activity proposed that includes the removal and replacement of the check structure, spillway, and control gates is a project that is a continuation of the District's Master Plan for System Improvements and was identified as a priority. These types of improvements have proven to be effective in meeting the established goals of conserving and helping manage water supplies and are envisioned to continue as we move forward to complete the program. Water and energy savings are realized immediately and measurable. The elements in our project are typical of irrigation projects but upgraded to current standards for performance and water control. The Rubicon Flumegate gate is a state-of-the-art technology developed in Australia as a response to the extended drought and is a proven science and applied technology with installations in Arizona and the Southwestern United States.

29. Will the proposed conservation activity implement an established Best Management Practice? Explain. : Yes, the project will implement established Best Management Practices by the District. This includes the application of Canal Lining a BMP that reduces seepage, prevents waterlogging of surrounding lands, maintains water quality, and reduces erosion. This will be done around the structure installations. Flow Rate Measurement a BMP at metering in canal flow with canal gates and the spills with the Rubicon Flumegate. This provides information critical to making water management decisions, helps prevent runoff, and helps deliver the quantity of water required to farmers. It improves irrigation project efficiency, reduces spills, and can support SCADA technology. SCADA will be implemented to monitor and control the flow control gates for flow diversion and to manage spills, sluicing, and trash management to ensure steady deliveries into the system. PM-10 BMP for unpaved operation and maintenance roads on canals are also supported due to improved water control which requires less traffic on dirt canal banks.

Additional Supporting Documentation (pdf, jpg, word, excel) : WIFA_SCIDD__Resolution & Letters of Support.pdf

Additional Supporting Documentation (pdf, jpg, word, excel) : TAB_SCIDD Budget Table.pdf

Additional Supporting Documentation (pdf, jpg, word, excel) : MAP_SCIDD Project Area & Location Map.pdf

Additional Supporting Documentation (pdf, jpg, word, excel) : TAB_LMS Problems & Outcomes.pdf

Additional Supporting Documentation (pdf, jpg, word, excel) :

Average Score :

# of Reviews : 0

# of Denials : 0

Please use the following link to view the Budget

Budget Worksheet :

View Budget Worksheet : https://portal.ecivis.com/#/peerBudget/C9FEB28A-264F-44AB-A708-44B1BC5F05E9

Application Goals :

View Application Goals : https://portal.ecivis.com/#/peerGoals/41087666-9805-402D-B35F-88C9B4710ADF

Created by : zengine+36768@srm.ecivis.com

Record ID # : 50899693

Last change : 2023-05-23T22:57:59+0000

Application Budget for San Carlos Irrigation and Drainage District

Program: Water Conservation Grant Fund (WCGF)
Project name: SCIDD Phased System Improvements Program: Little Mountain Spill Water Conservatory Project

Budget Stage:

Pre-Award

Actions

Budget Summary

Total Direct Costs	$554,133.65
Total Indirect Costs	$1,524.75
Total Amount (Direct + Indirect)	$555,658.40
Match / Cost Share	$138,914.60

$0.00

Program Income

Budget Settings

Budget Items

Ext Cost **Direct Cost** **Ind Cost** **Cost Share**

1. Personnel

$8,047.45

$8,047.45

$0.00

Ext Cost **Direct Cost** **Ind Cost** **Cost Share**

$3,900.00

2. Fringe Benefits

$0.00

$0.00

$1,524.75

Ext Cost **Direct Cost** **Ind Cost** **Cost Share**

$0.00

3. Travel

$0.00

$0.00

$0.00

Ext Cost **Direct Cost** **Ind Cost** **Cost Share**

$0.00

4. Equipment

$0.00

$0.00

$0.00

Ext Cost **Direct Cost** **Ind Cost** **Cost Share**

$0.00

5. Supplies

$0.00

$0.00

$0.00

Ext Cost **Direct Cost** **Ind Cost** **Cost Share**

$0.00

6. Contractual

$69,598.20

$69,598.20

$0.00

Ext Cost **Direct Cost** **Ind Cost** **Cost Share**

$17,400.00

7. Construction

$463,988.00

$463,988.00

$0.00

Ext Cost **Direct Cost** **Ind Cost** **Cost Share**

$111,364.00

8. Indirect Costs

$0.00

$0.00

$0.00

Ext Cost **Direct Cost** **Ind Cost** **Cost Share**

$0.00

9. Other

$12,500.00

$12,500.00

$0.00

$6,250.00

Other

Program Income

Income

1. Program Income

$0.00

Budget Narrative

H1 H2 H3

8000 characters remaining

RESOLUTION #2023-05-02

OF

THE BOARD OF DIRECTORS OF

SAN CARLOS IRRIGATION AND DRAINAGE DISTRICT

(Adopted May 17, 2023)

BE IT RESOLVED by the Board of Directors (the "Board") of San Carlos Irrigation and Drainage District (the "District") as follows:

1. That the application for a Water Infrastructure Finance Authority of Arizona (WIFA) Water Conservation Grant Fund (WCGF) (the "Grant") by the District Manager for the SCIDD Phased System Improvements Program: Little Mountain Spill Water Conservatory Project (the "Project") is hereby approved.
2. That District Manager Shane Lindstrom is hereby authorized to submit the application for the Grant and to execute any and all documents, instruments, and reports necessary or appropriate to apply for, obtain, and use the Grant.
3. That District Manager Shane Lindstrom is hereby authorized to expend up to $138,914.60 including combination of in-kind services and District monies for the Project over the course of three (3) years, which monies the Board finds are available for this purpose, and to apply the Grant to the costs of the Project.
4. That the District will work with the Water Infrastructure Finance Authority of Arizona to meet established deadlines for entering into a grant or cooperative agreement.

I hereby certify that the foregoing is a true and correct copy of the Resolution #2023-05-02 duly adopted by the Board of Directors of the San Carlos Irrigation and Drainage District on May 17, 2023.

Dennis Bagnall, District President

May 17, 2023

Hiscox Farms
1555 East Starview Avenue
Coolidge, AZ 85128

RE: Water Infrastructure Finance Authority of Arizona (WIFA) Water Conservation Grant Fund (WCGF) SCIDD Phased System Improvements Program: Little Mountain Spill Water Conservatory Project

To Whom It May Concern,

I am pleased to write this letter in support of the San Carlos Irrigation and Drainage District (SCIDD) Phased System Improvements Program: Little Mountain Spill Water Conservatory Project funding opportunity through the Water Conservation Grant Fund (WCGF) issued by the Water Infrastructure Finance Authority of Arizona (WIFA). This project seeks to provide on demand flows to downstream users reducing system spills and helping to support the best and most efficient on-farm irrigation practices that provide the highest irrigation efficiencies and least energy consumption.

Thank you for accepting this letter of support for the grant consideration.

Sincerely,

Noah Hiscox

May 17, 2023

J&M Farm
6334 West Martin Road
Coolidge, AZ 85128

RE: Water Infrastructure Finance Authority of Arizona (WIFA) Water Conservation Grant Fund (WCGF) SCIDD Phased System Improvements Program: Little Mountain Spill Water Conservatory Project

To Whom It May Concern,

I am pleased to write this letter in support of the San Carlos Irrigation and Drainage District (SCIDD) Phased System Improvements Program: Little Mountain Spill Water Conservatory Project funding opportunity through the Water Conservation Grant Fund (WCGF) issued by the Water Infrastructure Finance Authority of Arizona (WIFA). This project seeks to provide on demand flows to downstream users reducing system spills and helping to support the best and most efficient on-farm irrigation practices that provide the highest irrigation efficiencies and least energy consumption.

Thank you for accepting this letter of support for the grant consideration.

Sincerely,

James Shaw

May 17, 2023

Morning Star Farms
19432 East Diversion Dam Road
Florence, AZ 85132

RE: Water Infrastructure Finance Authority of Arizona (WIFA) Water Conservation Grant Fund (WCGF) SCIDD Phased System Improvements Program: Little Mountain Spill Water Conservatory Project

To Whom It May Concern,

I am pleased to write this letter in support of the San Carlos Irrigation and Drainage District (SCIDD) Phased System Improvements Program: Little Mountain Spill Water Conservatory Project funding opportunity through the Water Conservation Grant Fund (WCGF) issued by the Water Infrastructure Finance Authority of Arizona (WIFA). This project seeks to provide on demand flows to downstream users reducing system spills and helping to support the best and most efficient on-farm irrigation practices that provide the highest irrigation efficiencies and least energy consumption.

Thank you for accepting this letter of support for the grant consideration.

Sincerely,

Dennis Bagnall

May 17, 2023

Rankin Farms
924 West Butte Avenue
Florence, AZ 85132

RE: Water Infrastructure Finance Authority of Arizona (WIFA) Water Conservation Grant Fund (WCGF) SCIDD Phased System Improvements Program: Little Mountain Spill Water Conservatory Project

To Whom It May Concern,

I am pleased to write this letter in support of the San Carlos Irrigation and Drainage District (SCIDD) Phased System Improvements Program: Little Mountain Spill Water Conservatory Project funding opportunity through the Water Conservation Grant Fund (WCGF) issued by the Water Infrastructure Finance Authority of Arizona (WIFA). This project seeks to provide on demand flows to downstream users reducing system spills and helping to support the best and most efficient on-farm irrigation practices that provide the highest irrigation efficiencies and least energy consumption.

Thank you for accepting this letter of support for the grant consideration.

Sincerely,

Guy Rankin

Grant Award Budget For:

FY 2023 WIFA GRANT

Project Name: San Carlos Irrigation Drainage and District

Budget Items

Category	Title	Est. Cost	Total Cost
Construction			
	Rubicon Gates for Check and Spill	$ 104,988.00	$ 104,988.00
	Concrete Structure and Pipe with Outlet Structure and Safety Features	$ 348,500.00	$ 348,500.00
	Misc. Items and Removals	$ 10,500.00	$ 10,500.00
Construction Total		**$ 463,988.00**	**$ 463,988.00**
Environmental Work			
	Enviornmental Clearance	$ 12,500.00	$ 12,500.00
Enviornmental Work Total		**$ 12,500.00**	**$ 12,500.00**
Engineering and Inspection			
	Engineering Design	$ 46,398.80	$ 46,398.80
	Construction Inspection	$ 23,199.40	$ 23,199.40
Engineering and Inspection Total		**$ 69,598.20**	**$ 69,598.20**
SCIDD Project Management and Admin			
	SCIDD PM & Admin	$ 9,572.20	$ 9,572.20
SCIDD Project Management and Admin Total		**$ 9,572.20**	**$ 9,572.20**
SCIDD Contribution Cost Total			**$ 555,658.40**

FUNDING SOURCES	PERCENT OF TOTAL COST	TOTAL COST BY SOURCE
Recipient Funding	0.00%	$0.00
WIFA Non-Federal Funding	75%	$416,743.80
NMID In-Kind Contributions	25%	$148,914.60
Reclamation Funding	0.00%	$0.00
TOTALS	100%	$565,658.40

Little Mountain Spill "Problems and Outcomes" Assessment

Existing Problem	*Rehabilitation Outcome*
Canal water surface level varies by feet, varying delivery flows.	Canal level kept within inches, thereby providing steady delivery flows.
Spill is not well controlled, resulting in significant losses to system. Actual amounts not measured.	Spill will be minimized through precise control and frequent adjustment. Spill quantities will be measured and recorded.
Lack of flow adjustability during storm events results in canal overtopping.	Rubicon FlumeGate and inlet structure fixed weirs are sized for both normal operation and storm event flows, minimizing/eliminating canal overtopping.
Access to site during monsoon events is very unsafe.	Remote control of Rubicon FlumeGate minimizes the need to be onsite.
Ditch operators are potentially over-utilized to maintain their divisions of SCIDD's irrigation system.	Remote monitoring & control allows for smart-phone access to the spillway site at all times, thereby allowing for better operator coverage.

Water Conservation Grant Fund Application Evaluation
Round 1

San Carlos Irrigation and Drainage District – SCIDD Phased System Improvements Program	**WC1-045-2023**
Grant Amount	$555,658.40
Category	Agriculture System Upgrade
Summary	San Carlos Irrigation and Drainage District (SCIDD) is requesting funding for a portion of their SCIDD Phased System Improvements Program. In early 2010, SCIDD completed the planning and development to initiate the Phased System Improvements Program with specific goals to improve system operations and service, reduce overall maintenance costs, and conserve water for drought resiliency. The program was broken up into logical phases that include Reaches 1 through 4 and then continues with the Reach 5 the system laterals. This system-wide rehabilitation and modernization project began construction with limited Federal funding later in 2015 and was estimated to last over a decade. There is only one primary spill location in the San Carlos Irrigation and Drainage District, the Little Mountain Spill from the Casa Grande Canal. The facilities have exceeded their design life and are in various conditions of failure, they leak, are manually controlled, and in need of immediate replacement. The applicant believes current losses experienced at the Little Mountain check and spillway location are approximately 7,240 acre-feet per year. SCIDD proposes to use WCGF monies to do the following at the Little Mountain spillway: • Canal Check Structure Removal/Replacement • Canal Spillway Structure Removal/Replacement • Canal Gate and Spill Gate Installation
Location	City of Florence, Pinal County
Estimated water savings in acre-feet per year	5,792
Duration of project/program	Approximately one year - The District anticipates it will take 270 days to complete this activity. Applicant expects conservation benefits to continue well into the future.

Water Conservation Grant Fund Application Evaluation
Round 1

Conservation Activity Benefits and Results
Statutory Evaluation Criteria #1, #2, and #4

Activity Type	Programs and projects that reduce water use Per A.R.S. 49-1332(B)(2)
Source of water	The district receives water from the San Carlos Project Irrigation (Project). The Project delivers water to the district and to the San Carlos Irrigation Project Indian Works (SCIP-IW), which also serves the Gila River Indian Community. This includes stored water behind San Carlos Reservoir, natural-flow water in the Gila River between the San Carlos and the project diversion at Ashurst Hayden Diversion, water from Project groundwater wells, and GRIC Central Arizona Project (CAP) water. There are five points where CAP water enters the irrigation project. This water is commingled with Project water, surface and groundwater described above, and is part of the water delivered through the District to Gila River.
Community information	San Carlos Irrigation and Drainage District is rich in productive soils and climate for agriculture and even richer in history. Native American Indigenous have called this District home for centuries, and the district inhabits the ancestral lands of the Hohokam and a monument to these great people at the Casa Grande ruins.
Costs and benefits of project/program	The applicant noted that due to the ongoing 20-plus year major drought, it is pertinent that the district conserves as much water as possible. Replacing deteriorating structures and manual outdated gates is a priority in the on-going efforts to modernize the District. The applicant believes this funding will help SCIDD to continue to be good stewards of soil and water resources. Construction will help create jobs in the local depressed economy that has a high unemployment rate. After construction of the project the district will experience less spillage at the end of the system, that results in less expense for labor and equipment for maintenance currently required in the area. The project will result in better operational practices that will yield better service to farmers, a better service level results in better crop production and additional on-farm water efficiencies. In addition to conserving water that can remain in both San Carlos Lake or Lake Mead and all those environmental ancillary benefits, being able to reduce leakage and seepage from the SCIDD canal system works to reduce the abundance of noxious weeds that take over open areas of the district. Noxious weeds not only consume water that can be used for irrigation crops, but they steal nutrients from crops, and Irrigation workers must make extra efforts to remove these weeds, requiring driving on canal banks, along with burning of weeds. The reduction in burning of weeds and operational improvement will result in reduced use of vehicles on dirt roads reducing

	dust/air pollution that improves air quality, lung disease, and the use of fossil fuels. The wildlife in the general project area includes species such as the Lesser nighthawk, and the endangered burrowing owl. Arizona's state bird, the Cactus Wren, is also a year-round resident of the county. The applicant believes these species will benefit by having access to reliable water not otherwise put to beneficial use. They also noted three project elements including the check structure, spillway, and Flume Gates have a 25-year design life.

Funding Sources
Statutory Evaluation Criteria #3 and #5

Eligibility for LTWAF or WSDF	The Applicants advise they are currently unable to take on loans. The San Carlos Irrigation and Drainage District is in a depressed economic condition and with the many challenges facing the district cannot afford to take on financial debt and needs to find ways to leverage their limited funding. Without cost share funding support from WIFA the District does not believe the proposed activities would be completed. The applicant stated that due to operational and financial impacts of the COVID 19 pandemic and the impeding major drought on the Colorado River, the district is not able to fund and implement the proposed water conservation activities.
Leverage of multiple funds	The district explained they do not have a history of applying for grants and funding opportunities and do not have other funding sources to leverage. They did indicate the possibility of applying for the Drought Contingency Plan funds or "other Federal NOFO opportunities"
Source of funding and match	All funds for the WIFA grant matching requirements will be paid directly with San Carlos Irrigation and Drainage District funds, and District in-kind services. In kind services are envisioned to include planning, design, construction support, and construction inspection activities.

Capacity, Feasibility, & Public Comment
Statutory Evaluation Criteria #6, #7, and #8

Qualifications and capacity of applicant	Around fifty-thousand acres of non-Indian land is served by SCIDD, extending south from Florence, east to Coolidge, and west to Casa Grande in the Central Arizona area of Pinal County. All facilities are maintained and operated by the district. The day-to-day management of the district, and operations and maintenance are managed by Shane Lindstrom, General Manager who will be responsible for oversight of the Water Conservation

	Activity for the District, and the requested WIFA grant. The district has historically used and will utilize George Cairo Engineering, Inc. (GCE) a local irrigation and water resources firm regionally recognized as experts in flow measurement, design, and modernization of irrigation systems. GCE will complete the technical services to include planning, design, and construction management. Work will be completed under the direction of George Cairo, Principal Engineer, and engineer of record for the district. Mr. Cairo, Principal and co-founder of GCE, has more than thirty years of experience in agricultural engineering, water resources engineering, and conveyance planning, design, and construction. He is responsible for the daily operations of the GCE Central Arizona Office and the Imperial Valley Office as well as providing project sponsor, and project/design management and engineering support as a member of multidiscipline teams on a variety of water resources, capital improvement, and conveyance projects. He has extensive experience in irrigation systems planning, design and operations, water resources engineering, supply and demand analyses, municipal and irrigation water conveyance and distribution, groundwater recharge, and water conservation. Furthermore, he has expertise in open channel design, pipelines, hydraulic structures, flow measurement, HEC-RAS steady, and unsteady state hydraulic modeling, irrigation reservoirs, on-farm irrigation systems, and agricultural water quality. As a principal engineer he is responsible for quality control and quality assurance reviews of all GCE Central Arizona and Imperial Valley project deliverables as well as development of firm design standards. Mr. Cairo is the district engineer of record for several irrigation, water, and power districts in Arizona and California and is recognized as an expert and leader in the protection and transition of irrigation districts associated with agricultural to urban land conversion, irrigation engineering, hydraulics, and water resources engineering.
Feasibility of project/program	The applicant stated the project is 100 percent feasible and has been approved by their Board. The district has coordinated with vendors for the purchase of the gates and valves which are long lead items to have readily available within the planned timeframe. Also concrete for the concrete structures is now readily available with the recent fly ash shortage issue locally resolved. The district has the labor resources to commit to the project and have a commitment from the engineer and contractor to support this project.
Public comments	The applicant provided letters of support to indicate that the local farming community is in support of the proposed Water Conservation Activity.

Water Conservation Grant Fund Application Evaluation
Round 1

Technical Review:

The Applicants **has provided a valid SAM.GOV UEI #**, which allows them to apply for federal funds. The applicant has completed most steps except community demographics. The community demographics were not explained with population numbers. All other steps were completed and show a program that is acceptable under the regulations.

Expenditure Code 5.8 Clean Water: Water Conservation

ARPA Final Rule (31 CFR Part 35 RIN 1505–AC77) defines water infrastructure projects as "eligible projects under the Clean Water State Revolving Fund." "A project shall meet the criteria of CWSRF eligibility found in Section 603(c) of the Clean Water Act (CWA)". Specific Expenditure Codes were created to define activities available under the water infrastructure category.

The Interagency Service Agreement (ISA-ARPA-WIFA-070122-01) between the State of Arizona, Office of the Governor and WIFA required the project / program be specific to Expenditure Code 5.8 Clean Water: Water Conservation.

WIFA staff find this project / program is consistent with Expenditure Code 5.8 Clean Water: Water Conservation as determined in Section 603c of the Clean Water Act (CWA) and the ISA.

Attachments:

- San Carlos Irrigation Drainage District WC1-045-2023 Application
- Budget
- Letters of Support, Maps, and other supplemental information

Evaluation Criteria Statutory Reference:

49-1334. **<u>Evaluation criteria for water conservation programs and projects from the water conservation grant fund; procedures</u>**

The authority shall determine the order and priority of water conservation programs and projects proposed to be funded in whole or in part with monies from the water conservation grant fund based on the following, as applicable:

1. The extent to which the water conservation program or project achieves one or more of the results prescribed by section 49-1332, subsection A.
2. The costs and benefits of the water conservation program or project, including environmental costs and benefits.
3. If the water conservation program or project is eligible for funding from the long-term water augmentation fund established by section 49-1302 or the water supply development revolving fund established by section 49-1271 and if the nature of the water conservation program or project makes funding from the long-term water augmentation fund or the water supply development revolving fund impractical.
4. The ability to provide multiple benefits.
5. The degree to which the water conservation program or project will maximize or leverage multiple available funding sources, including federal funding.
6. The qualifications and capacity of an applicant.
7. The feasibility of the water conservation program or project.
8. Public comments.

WCGF Committee Evaluation:

☐ Recommend Rejection of Grant Application

☐ Recommend Approval of Grant Application

☐ Recommend Approval of Grant Application with Modifications

Tab 11

AGENDA ITEM:

Recommend Approval of Grant Application WC1-053-2023 – City of Tucson – WCGF – $3,000,000

ACTION REQUIRED:

Review, Discuss & Recommend Approval

PREVIOUS ACTION:

None

STAFF CONTACT:

Lindsey Jones

RECOMMENDED DISCUSSION TIME:

5 Minutes

ATTACHMENTS:

- Grant Application WC1-053-2023 – City of Tucson
- Water Conservation Grant Fund Evaluation

STAFF COMMENTS:

None

Automated Metring Infrastructure (AMI) Program Phase 1

Profile : kris.lafleur@tucsonaz.gov

Entity Name: : City of Tucson Water Department

I. General Information

1. Title of Project: : Automated Metring Infrastructure (AMI) Program Phase 1

2.Type of Conservation Activity (A.R.S. § 49-1332(B)): : Programs and projects that reduce water use Per A.R.S. 49-1332(B)(2)

Note: for the purpose of the application, the term project and program will be referred to as “conservation activity”

3. Is this for an individual Water Conservation Project or a general Water Conservation Program? : Water Conservation Programm

Please describe the specific components that make it a program. : This application describes a Water Conservation Program. The AMI Program, Phase 1 will replace outdated water meter and endpoint technology with AMI meters, electronic endpoints, and an associated network of communication equipment targeting critical meter groups across the Tucson Water service area. This robust program will be completed in phases to target multiple meter groups over a period with long-lasting impacts, including a recurring annual deliverable of water savings. Phase 1 will impact over 20,000 Reclaimed, Irrigation, Potable Water, and Construction Water meters across Commercial, Construction, Multifamily, Residential, and Municipal customers throughout Tucson Water’s 398 square-mile service area. Across these classifications we will target five overarching groups: 1) the entire reclaimed water meter system, 2) all large water meters (3-inch and larger), 3) City-owned construction meters, 4) water meters at City facilities, and 5) all commercial rate class customer water meters.

4. What is the location of conservation activity?

City: : Tucson

County: : Pima

Program/Project Congressional District (check all that apply) :

6

7

Program/Project Legislative District (check all that apply) :

16

17

18

19

20

21

23

Watershed : Santa Cruz River

Active Management Area (if applicable): : Tucson AMA

Irrigation Non-Expansion area (if applicable): :

5.Conservation Activity Cost

Amount requested from the WCGF for this activity: : $3,000,000.00

Amount of matching funds: : $1,000,000.00

Total conservation activity cost: : $4,000,000.00

When applying for the grant, note that a single water conservation program grant may not exceed $3,000,000. A single water conservation project grant may not exceed $250,000. The WCGF requires at least a twenty-five percent match for each water conservation program or project.

6. What is the estimated water savings in acre-feet per year? : 4,257

Explain calculation: : The estimated water savings is between 2,216 and 4,257 acre-feet per year for this conservation program. This is based on the sum of the average consumption data for each of the five targeted meter groups: reclaimed water meters, large water meters, City-owned construction meters, City facility meters, and commercial rate class meters. Research by the American Water Works Association (AWWA) estimates water savings from AMI in the amount of 6.3% - 12.1% of current usage. However, that’s assuming 100% engagement with the AMI portal to drive behavior changes. More research is needed to fine-tune the estimations, especially for different demographics, but current research from the AWWA has also found that with proactive outreach customer sign-up rates for the AMI portal can be in the range of 30%-45%. This conservation program targets five (5) meter groups that are more likely to have higher engagement rates within this range. In particular, large water meters will have a high engagement rate as they are already closely monitored by the utility on a monthly basis, as well as tested on a yearly basis, and have regular close communication with the customers. For construction meters, the current practice of manual reading lends itself to be a group that will benefit from the automation of meter reads and the granularity of data. These construction meter installations on fire hydrants often leak, so the alerts from AMI will be especially useful for this group. City facilities will have the highest engagement rate as they are internal customers. Lastly, commercial customers will likely have higher engagement as well

because their bottom line is impacted by their water usage. Table 1 (see supplemental information) details the estimated water savings. In addition to these water saving paths per targeted water meter groups in this program, we anticipate further water savings in the form of leak mitigation and reducing non-revenue water.

7. What is the expected duration of the conservation activity? : The expected duration of this program is broken down into two periods. The first is the timeline for installations. This program will take approximately 24 months to install 20,000 endpoints and replace incompatible out-of-date meters. Installation will be completed well before the December 31, 2026, close-out requirement. The second duration of this conservation activity is the longevity of this program. The smart meter technology has a 20-year warranty. This allows the investment of installing AMI to have a meaningful impact over time.

II. Conservation Activity Benefits and Results

8. What is the water conservation activity you propose to fund with grant monies? Describe in detail. : Tucson Water will replace outdated water meter and endpoint technology with AMI meters, electronic endpoints, and an associated network of communication equipment. This activity will impact over 20,000 potable and reclaimed water meters across Commercial, Construction, Multifamily, Residential, and Municipal customers in Tucson Water's service area. By providing near real-time data to water system operators and to customers, the program is expected to result in annual water savings of an estimated 6.3% to 12.1% which totals 2,216 to 4,257 acre-feet for the targeted meter groups, currently lost to leaks and inefficient water use. To summarize, the program will produce water conservation results across our reclaimed and potable water systems through two primary avenues: leak detection and behavior change. Potable water customers: Efficiency improvements and leak-detection enhancements afforded by AMI meter technology will lead to reductions in potable water usage, directly reducing our customers' usage of Colorado River water. The estimated annual Colorado River water savings for this population is 1,969 to 3,782 acre-feet. Reclaimed water customers: Reductions in reclaimed water usage by customers will result in an increase in the volume of reclaimed water held as long-term storage credits. In times of future water resource shortage, these may be withdrawn in place of future Colorado River water deliveries. The estimated annual water savings for this population is 247 to 475 acre-feet. Program Details: The program area covers approximately 398 square miles of Tucson Water's water service areas located in and around the Tucson metropolitan area. The proposed infrastructure improvements to the System will be in the City of Tucson, unincorporated Pima County, the Town of Marana, and the Town of Oro Valley. 1) Reclaimed Water Meters: Tucson Water provides recycled water to over 1,000 sites across the City of Tucson, unincorporated Pima County, the towns of Marana and Oro Valley. The sites include private customers, common areas, right-of-way irrigations, public and private golf courses, parks, and numerous public and private schools. The system provides a benefit to the entire population of the Tucson Water service area (approximately 745,000) as well as towns of Marana and Oro Valley by reducing reliance on mined groundwater and on Colorado River water delivered via the Central Arizona Project (CAP). This portion of the program would convert the entire reclaimed water meter system to smart meters. 2) Large Water Meters: Large water meters are those meters with a 3-inch bore and greater. Tucson Water services and maintains approximately 300 large meters. These are for commercial and multi-family customers across the City of Tucson, unincorporated Pima County, the towns of Marana and Oro Valley as well. These meters are the highest individual consumers of water with an average consumption of 2,400 CCFs per month. Smart meters would benefit this population of the highest water users. 3) City-owned Construction Water Meters: Construction water meters, also known as fire-hydrant meters, are utilized in construction projects. These meters are used on a short-term basis and are moved around the entire Tucson Water service area driven by the demand of development across the region. Presently contractors submit their meter reads for tracking and billing. Additionally, contractors may use privately owned construction meters. However, private meters will soon be phased out and only City-owned construction meters will be utilized. This subgroup of meters totals approximately 200 meters. 4) City Facility Water Meters: City of Tucson facilities represent over 1,000 water meters at locations that include City buildings, parks, golf courses, right-of-way irrigation, and fire protection. The City and Tucson Water strive to set a community example for water conservation. Smart meters at these facilities

will enable detailed tracking of City water usage and enhance leak detection capabilities, leading to reductions in the City's annual water consumption. 5) Commercial Water Meters: Lastly, the largest subgroup of meters in this conservation program are the meters serving commercial rate class customers, which total approximately 17,500 meters. These locations spread across the Tucson Water service area including businesses in the City of Tucson, unincorporated Pima County, and the towns of Marana and Oro Valley. These meter groups are not entirely exclusive of each other and there is some overlap. For example, many large meters are a part of the reclaimed water system and may also serve commercial purposes. We have accounted for this in the total meter counts. By taking this approach on these five groups across the Tucson Water service area, we are targeting the most critical areas that would benefit most significantly from smart meter technology in terms of having water conservation impacts. Map 1 (see supplemental information) indicates specific locations of large meters, reclaimed meters, and commercial rate class meters. Construction meter locations are not plotted because these locations are variable and short-term, and City facility locations were excluded because it is understood that they are within city limits.

9. What is the source of the water that will be conserved? If it is mainstem Colorado River water or Colorado River water delivered through the Central Arizona Project, please clearly indicate so. : Tucson Water's primary potable water resource is Colorado River water delivered through the CAP canal. AMI conversion of potable water meters in the categories of large water meters, construction meters, City facility water meters, and commercial water meters will directly result in annual reductions of the City's Colorado River water consumption by an estimated 1,969 to 3,782 acre-feet. Tucson Water's reclaimed water system provides a benefit to the entire population of its service area and to neighboring jurisdictions by reducing reliance on Colorado River water delivered via the CAP. Conversion of all reclaimed water meters to smart meters is expected to reduce reclaimed water consumption through leak detection and increased customer efficiencies in the amount of 247 to 475 acre-feet annually. Unconsumed reclaimed water will be recharged in local aquifers and held as long-term storage credits. In times of water resource shortage, these may later be withdrawn in place of future Colorado River deliveries.

10. Describe the community (population size, demographics, principal economic activities, etc.) impacted by the conserved water. : The population impacted by this conservation program includes the over 20,000 customers associated with the five targeted meters groups for the: reclaimed water meter system, large water meters, City-owned construction meters, meters at City facilities, and commercial water meters. Although this segment of the population accounts for less than 10% of all Tucson Water meters and customers, their consumption makes up more than 50% of Tucson Water's customer water demand. The demographics for each of these groups is broken down below. 1) Reclaimed Water Meters: Of the over 1,000 reclaimed water meters, over half serve residential customers and all of these are appropriately sized small meters (2-inches or less). There are in fact two residential neighborhood communities in Tucson included in this group that were built with a specific emphasis on conservation that have clusters of reclaimed water meters. These are at the Tucson County Club Estates and the Civano neighborhood. The next largest demographic within this group is commercial customers. These customers vary in the size of meter they have, and the types of enterprises included in this subgroup are as follows: various private businesses, golf courses, schools, medical facilities, neighborhood associations, and construction companies, in addition to public parks and rights-of-way. The subgroup of City parks, Pima County properties, and rights-of-way makes up a large proportion of reclaimed water customers, and most are connected to 2-inch meters. Lastly, multifamily customers, which include duplexes and triplexes as well as facilities with up to 50 units, make up a sizeable number of reclaimed meters and generally have a 1-inch meter. The overall demographics of this group are displayed in Graph 1 and Table 2 (see supplemental information). 2) Large Water Meters: Large water meters are meters ranging in meter size from 3-inches to 16-inches, of which there are approximately 300. The customers in this group have the highest individual water consumption and utilize large water meters for potable water, irrigation, and reclaimed water (with overlap with the reclaimed water meter group detailed above). By far the largest customer class within this group of large water meters is commercial customers, which make up 70% of the total. The commercial enterprises included in this subgroup are as follows: various private businesses, including the Amazon warehouse, hotels, golf courses, schools, medical facilities, churches, casinos, car dealerships, the

airport, neighborhood associations, construction companies, and the Saguaro National Park, in addition to City parks and rights-of-way. Other water utilities in the region that Tucson Water provides water to are also included in this group. This group has many similarities in its demographic makeup to the reclaimed water meter group. A notable difference is the inclusion of industrial facilities in this group. This includes Raytheon Systems Company. The overall demographics of this group are displayed in Graph 2 and Table 3 (see supplemental information). 3) City-Owned Construction Water Meters: The demographic makeup for the roughly 200 construction water meters is very homogeneous as all customers for these meters are within the construction rate class. They have 2.5-inch water meters that are installed with a backflow assembly onto fire hydrants for construction purposes across the Tucson Water service area. 4) City Facility Water Meters: Though this group is more homogenous than the others, as the demographic of the customer is simply the City of Tucson, its makeup of uses vary. The over 1,000 water meters at City facilities are used for potable water, irrigation, and reclaimed water, and include the following applications: golf courses, parks, medians and other rights-of-way, community centers, sportsplex, City Hall and other city operational buildings. Note, there is some overlap in this group with the reclaimed water meter and large water meter groups as well. Additionally, though the direct "customer" is officially the City of Tucson, it is the uses of these public spaces by the Tucson community at large that brings diversity and purpose to the spaces. 5) Commercial Water Meters: The commercial water meter group totals approximately 17,500 water meters for potable water, irrigation, and reclaimed water use. 1-inch and 2-inch meters are the most common size servicing this population. In addition to the various commercial rate class customers that overlap with the reclaimed water meter and large water meter subgroups, other commercial customers that are included in this group are restaurants, retailers, and a wide variety of businesses and offices.

11. What is the extent to which your water conservation activity achieves one or more of the following (select all that apply): :

value1

value2

value3

Describe: : This conservation program will lead to a total long-term reduction in water use in the amount of 2,216 to 4,257 acre-feet annually, compared to current consumption. This is based on the customer behavior change that occurs with access to greater information about one's water usage. Additionally, the utility will be able to take more impactful actions based on this data to target information to customers given their usage patterns, as well as have more significant leak detection and correction, and ultimately lead to long-term demand reduction due to these improved water use efficiencies. This conservation program provides estimated annual water savings from the potable water system in the amount of 1,969 to 3,782 acre-feet which directly reduces our demand for Colorado River water. The inclusion of our entire reclaimed water meter systems in this conservation program is estimated to bring an additional 247 to 475 acre-feet of annual water savings. Reductions in reclaimed water usage by customers will result in an increase in the volume of reclaimed water held as long-term storage credits. In times of future water resource shortage, these may be withdrawn in place of future Colorado River water deliveries, supporting water reliability.

12. What is the extent to which your water conservation activity addresses one of more of the following: :

Water supply shortages

Describe: : The outcome of the program will be a long-term demand reduction of Colorado River and reclaimed water supplies which will help mitigate water shortage stressors by using less. The Colorado River water delivered via the CAP is the primary source of water for the Tucson region. With AMI, customers and the utility will be enabled with a greater granularity of water consumption data tracking. By providing this near real-time data to customers

and water system operators, the program is expected to result in annual water savings of an estimated 6.3% to 12.1% which totals 2,216 to 4,257 acre-feet for the targeted meter groups, currently lost to leaks and inefficient water use.

13. How will your water conservation activity align with a local, regional, or statewide water plan or integrated resource management plan? : Tucson Water is currently engaged in the preparation of a new comprehensive long-range water plan to guide its water resources for the next 80 years. The master plan is based on a nationally recognized, integrated approach to water resource management known as “One Water.” The goal of the One Water 2100 Master Plan is to foster a shared vision for providing a reliable source of the highest-quality potable and non-potable water for our community in the decades to come. As a part of this planning process, Tucson Water developed a Smart Metering Technical Memorandum, which explores the anticipated benefits of AMI conversion and provides a business case analysis that supports the program proposed by this conservation activity. Additionally, the program aligns with the City of Tucson’s long-term planning policies described in Plan Tucson. That document, required by State law, is intended to guide decisions affecting elements that shape the city, such as housing, jobs, land use, transportation, water, and energy resources. Key to the Plan are goals and policies that provide a framework to guide future actions. Used to best advantage, the Plan provides both a place to start and a place to end for the public, staff, and decision makers involved in developing or approving actions. That is, those who propose actions should do so with the Plan Tucson goals and policies in mind, and those reviewing proposed actions should assess whether the actions do in fact advance the Plan’s goals and policies. The water conservation activity proposed through this program aligns with multiple Elements, Goals, and Policies set forth in Plan Tucson that relate to the natural environment and the built environment.

14. What are the costs and benefits of your water conservation activity, including any environmental impacts? : The cost for this conservation program to install the AMI meters and endpoints is $4,000,000. The most significant impact of this program will come in the form of water conservation benefits. Research from the American Water Works Association (AWWA) has shown AMI leads to an average daily water savings in the range of 6.3%-12.1% for engaged customers. Additionally, AMI allows for near real-time leak detection. Whereas current leak detection often occurs only where there are obvious signs of leaks, i.e. water in the street or when customers notice irregularly in their monthly bills. Currently, Tucson Water Utility Service Technicians respond to over 3,000 leak work orders per year. With AMI, the utility and its customers will be able to proactively address and repair leaks. Furthermore, the transition and shift to full conversion of AMI will bring environmental benefits in the form of reduced gasoline use and carbon emission. Currently, Tucson Water vehicles drive well over 100,000 miles a year to collect meter reads. With AMI technology, driving and gasoline consumption for this task is eliminated because the meter reads are communicated cellularly instead. To offset the impact of acquiring new materials for the program, we will work with our AMI endpoint vendor to follow a more direct delivery method. By receiving materials directly from their manufacturing location in Nogales, Sonora, we will eliminate extra transportation impacts of shipping via their headquarters in Milwaukee, Wisconsin. Additionally, as is our current practice, we will recycle the current endpoints when they are replaced. Finally, the online customer portal with granular water consumption data from AMI can create additional motivation to drive more customers to paperless billing. Overall, this program will lead to the following environmental benefits: serve as a valuable water conservation tool, provide detailed water usage tracking, reduce non-revenue water, enhance customer service, reduce costs to customers, improve customer service efficiency, and improve operational efficiency.

15. How will you measure the effectiveness of the conservation activity? : Two of the primary benefits of AMI technology are its capacity for providing near real-time leak-detection alerts and its ability to acquire granular water consumption data from each customer meter. Measurements of the AMI Program’s effectiveness will come in the form of reduced water loss from leaks and in customers’ changed water-consumption behaviors. Tucson Water

will track the count and scale of leaks identified by AMI data. The utility will also track customers' engagement rates with the online customer portal. Ultimately, the program's effectiveness will be measured against the anticipated reduction in Colorado River water and reclaimed water resources, as described above.

III. Funding Sources

16. If your water conservation activity is eligible for funding from WIFA's Long-Term Water Augmentation Fund or Water Supply Development Fund, does the nature of your conservation activity make funding from those funds impractical, and why? : This conservation activity is not eligible for funding from the Long-Term Water Augmentation Fund or the Water Supply Development Fund.

17. Would the conservation activity be otherwise implemented without this grant funding? Explain. : Tucson Water recently conducted a successful small-scale AMI pilot program, and the utility is strategically positioned to roll-out Phase 1 AMI conversion to additional customer classes as described in this grant application. However, complete funding for Phase 1 has not been allocated through Tucson Water's Capital Improvement Program (CIP) budget due to other emergent water resource and infrastructure priorities. Without timely grant funding, Tucson Water's ability to complete this activity would be considerably delayed.

18. To what extent will your water conservation activity maximize or leverage multiple available funding sources, including federal funding? : This conservation activity will leverage committed Capital Improvement Program (CIP) utility funds. Tucson Water has two multi-year CIPs related to this conservation program. They are a Small Meter Replacement CIP and a Large Meter Replacement CIP. These CIPs are an effort to update identified out-of-date meters based on age and overuse, where their performance to accurately measure water consumption is declining. This is also an opportunity to replace these meters with meters that are compatible with AMI endpoints, which is critical to this conservation program. These CIPs provide matching funds while also elevating the metering infrastructure to be compatible with AMI.

19. Are there cost-sharing opportunities with other applicants or other parties? Explain. : Not at this time. Tucson Water previously explored a detailed pilot proposal to deploy a small number of AMI water meters that shared existing communications infrastructure with Tucson Electric Power Company. However, this partnership proved incompatible due to fundamental differences in the utilities' requirements for processing end-user data. We have identified the best-suited approach for this program to be that outlined in this application.

20. What is the source and amount of the match (including in-kind match)? : Source: Capital Improvement Program Funding Match amount: $1,000,000

IV. Capacity, Feasibility, & Public Comment

21. What qualifications and capacity do you have for completing your proposed water conservation activity? Include any past managerial deficiencies and provide the name(s) and qualifications of the individual(s) or entities who will be managing this activity. : This program will be completed and managed by Tucson Water's Customer Service Division (CSD), which consists of the Metering and Field Services staff responsible for installing, servicing, and repairing water meters, and the Customer Solutions Center staff, which is responsible for managing customer account, consumption, and billing information. In total, the CSD is staffed by 152 full-time employees. Within this group, the CSD Field Services Leadership Team is actively recruiting for a full-time AMI Project Manager, with an estimated start date of July 2023. Regardless of the funding source for Tucson Water's AMI Program, the AMI Project Manager will be tasked with overseeing the utility's transition to AMI technology over the next phases of AMI expansion. Until a

full-time Project Manager is on-boarded for this program, it will be managed by the CSD Field Services Leadership Team. This includes: Superintendent: Reyna Woods Assistant Superintendents: Marcos Arenas, Monica Gallegos, and Shane Gerbig Management Analyst II: Sasha Geschwind The Leadership Team has already conducted a successful AMI pilot program and is qualified and prepared to oversee an expanded program.

22. Will there be significant management impacts as the result of the proposed conservation activity, or any technology associated with the conservation activity? (For example: additional costs or staffing requirements) : Yes, there will be significant management impacts as the result of the proposed conservation activity. The scope of this program will require a Project Manager for which we are actively hiring. Additionally, there will be on-going costs for the cellular transmittal of the meter reading data which have been accounted for in the Customer Service Division's operational budget. Finally, this technology will require integration with our customer information and billing system, and this process is already underway.

23. Will the proposed conservation activity promote collaborative partnerships to address water-related issues? Explain. : The City of Tucson and its citizens are internationally recognized as water-conservation leaders. Tucson Water has several long-running partnerships with the University of Arizona and with a range of local non-profit organizations to promote water conservation, conduct residential and commercial water fixture upgrades and leak-prevention, and to educate our younger generations of community water stewards. Our conversion to AMI delivery points will create a powerful new set of data that Tucson Water will leverage into new conservation initiatives, partnerships, and education programs for years to come.

24. What is the stakeholder involvement in the conservation activity planning process? : As the utility planned and conducted a successful AMI pilot project and now moves towards AMI program expansion, stakeholder updates and feedback have taken place via public open meetings, community town halls, and consultant development sessions. AMI program stakeholders include the Tucson Mayor and Council via their appointed Citizens' Water Advisory Committee, the utility's One Water 2100 community stakeholders, and Tucson Water's Director's Office, water conservation staff, division administrators, and field staff.

25. Will the proposed conservation activity include public outreach and opportunities for the public to learn about the conservation activity? Explain. : This conservation program will include public outreach and opportunities for the public to learn about the conservation activity. In conjunction with the roll-out of AMI Phase 1, staff from Tucson Water's AMI Program, Water Conservation, and Public Information teams will continue to develop customer engagement and education protocols based upon industry best practices published by the American Water Works Association (AWWA) and other leading industry experts.

26. Is there community and/or sector support for the conservation activity? Explain. : There is ample community and sector support for this conservation activity. The Citizen's Water Advisory Committee has expressed eager support for AMI. AMI is in line with City Council established climate change mitigation plans and it is supported by Tucson Water's One Water 2100 Master Plan, which relies heavily upon diverse stakeholder input from the community.

27. How feasible is it to complete your water conservation activity? Explain. : Successful completion of this activity within the required timeframe is highly feasible. Tucson Water conducted an AMI Program Pilot from May-December 2022, building familiarity with AMI technology among key utility staff. As a result, Tucson Water is prepared to expand its AMI Program to Phase 1, entailing more than 20,000 additional AMI endpoints as proposed in this conservation activity. During AMI Program Phase 1, Tucson Water's metering/field services staff will take approximately 24 months to replace incompatible out-of-date meters and to install electronic endpoints and the associated network of communication equipment. Installation of all equipment associated with AMI Program Phase 1 will be completed well before the December 31, 2026, deadline established by AZWIFA per terms set by the U.S. Department

of the Treasury for ARPA funds. In parallel with the physical installation of equipment, Tucson Water's AMI Program staff will develop and complete training for Customer Service Division staff on the usage of AMI portals and data, complete integration with our customer information and billing system, and develop a customer outreach and education campaign to stimulate public engagement with this conservation activity.

28. If the conservation activity is a continuation of ongoing activities, has the activity been shown to be effective? If a new activity, has the proposed project, technology, or technique previously been implemented? : This conservation activity is a continuation of ongoing activities. From May-December 2022, Tucson Water piloted AMI technology at 100 locations across its service area in a sample that was representative of the utility's overall accounts. The AMI pilot was an operational success: AMI's cellular communication of meter reads and alerts was very effective, including incidents of meter tampering; acquisition of granular consumption data allowed our staff to answer customers' high-consumption concerns and to identify and resolve leaks; and AMI technology has been demonstrated to be temperature resilient, which is of course critical in our climate. In its short duration and given the small sample of meters, the pilot has not yet yielded significant water savings. However, as discussed above, long-term implementation of this conservation activity targeted at the largest water consumers in the community is expected to produce measurable and lasting water savings. This experience well equips us to move forward with AMI Program Phase 1.

29. Will the proposed conservation activity implement an established Best Management Practice? Explain. : Yes, the proposed conservation activity will implement established Best Management Practice (BMPs). We look towards the American Water Works Association (AWWA) and U.S. Environmental Protection Agency (EPA) for these BMPs, especially in terms of customer outreach to drive high engagement for various targeted outreach. For example, for commercial and industrial sites, hospitals, restaurants, multifamily buildings, etc., which have particular patterns of water consumption, AMI can be an especially useful tool for these customers. AMI can help them understand and manage their water use, help facilities establish an effective water management program, and identify projects and practices that can reduce facility water use. In addition to these BMPs, Tucson Water will develop Standard Operating Procedures (SOPs) for customer outreach, as well the management of the technology in the field, and in the office particularly for data management and data analytics.

Additional Supporting Documentation (pdf, jpg, word, excel) : Supplemental Information - Tucson Water.docx

Additional Supporting Documentation (pdf, jpg, word, excel) :

Additional Supporting Documentation (pdf, jpg, word, excel) :

Additional Supporting Documentation (pdf, jpg, word, excel) :

Additional Supporting Documentation (pdf, jpg, word, excel) :

Average Score :

# of Reviews : 0

# of Denials : 0

Please use the following link to view the Budget

Budget Worksheet :

View Budget Worksheet : https://portal.ecivis.com/#/peerBudget/A05D83E1-CCD7-4A59-BEF9-AFBD9FBB512F

Application Goals :

View Application Goals : https://portal.ecivis.com/#/peerGoals/ABB7F3B2-0FC2-44BF-8BAD-0713E580998C

Created by : zengine+36768@srm.ecivis.com

Record ID # : 50384002

Last change : 2023-05-18T00:33:40+0000

Grant Award Budget For:

FY 2023 Water Conservation Grant Fund (WCGF)

WATER INFRASTRUCTURE FINANCE AUTHORITY OF ARIZONA

Project Name: Automated Metering Infrastructure (AMI) Program, Phase 1

Budget Items

Category	Title	Units	Unit Cost	Extended Cost	Direct Cost	Indirect Cost	Cost Share
Personnel							
	AMI Project Manager	1	$53,000.00	$53,000.00	$53,000.00	$0.00	$0.00
Personnel Total		**1**	**$53,000.00**	**$53,000.00**	**$53,000.00**	**$0.00**	**$0.00**
Fringe Benefits							
	Fringe Benefits	1	$20,000.00	$20,000.00	$20,000.00	$0.00	$0.00
Fringe Benefits Total		**1**	**$20,000.00**	**$20,000.00**	**$20,000.00**	**$0.00**	**$0.00**
Travel							
	Travel	0	$0.00	$0.00	$0.00	$0.00	$0.00
Travel Total		**0**	**$0.00**	**$0.00**	**$0.00**	**$0.00**	**$0.00**
Equipment							
	Equipment	0	$0.00	$0.00	$0.00	$0.00	$0.00
Equipment Total		**0**	**$0.00**	**$0.00**	**$0.00**	**$0.00**	**$0.00**
Supplies							
	AMI Orion Endpoints	20,000	$80.00	$1,600,000.00	$1,600,000.00	$0.00	$0.00
	Braided Wire	20,100	$15.00	$301,500.00	$301,500.00	$0.00	$0.00
	Compatible Meter Replacement	Various	$1,000,000.00	$1,000,000.00	$1,000,000.00	$0.00	$0.00
Supplies Total		**Various**	**$1,000,095.00**	**$2,901,500.00**	**$2,901,500.00**	**$0.00**	**$0.00**
Contractual							
	Endpoint Installation	20,000	$39.00	$780,000.00	$780,000.00	$0.00	$0.00
	Billing Integration	1	$16,000.00	$16,000.00	$16,000.00	$0.00	$0.00
	Single Sign-on	1	$25,000.00	$25,000.00	$25,000.00	$0.00	$0.00
	Training	1	$4,500.00	$4,500.00	$4,500.00	$0.00	$0.00
Contractual Total		**20,003**	**$45,539.00**	**$825,500.00**	**$825,500.00**	**$0.00**	**$0.00**
Construction							
	Construction	0	$0.00	$0.00	$0.00	$0.00	$0.00
Construction Total		**0**	**$0.00**	**$0.00**	**$0.00**	**$0.00**	**$0.00**
Indirect Costs							
	Indirect Costs	0	$0.00	$0.00	$0.00	$0.00	$0.00
Indirect Costs Total		**0**	**$0.00**	**$0.00**	**$0.00**	**$0.00**	**$0.00**
Other							
	Contingency	1	$200,000.00	$200,000.00	$200,000.00	$0.00	$0.00
Other Total		**1**	**$200,000.00**	**$200,000.00**	**$200,000.00**	**$0.00**	**$0.00**
Grand Total							
Grand		**60,106**	**$1,318,634.00**	**$4,000,000.00**	**$4,000,000.00**	**$0.00**	**$0.00**

City of Tucson Water Department
Advanced Metering Infrastructure (AMI) Program Phase 1
Supplemental Information

Question #6:

Table 1.

Group	**Meters**	**Average Monthly Consumption per Meter (CCFs)**	**Estimated Engagement Rate (E.R.)**	**Annual Savings at 6.3% (A.F.) given est. E.R.**	**Annual Savings at 12.1% (A.F) given est. E.R.**
Reclaimed water meters	1,000	475	30%	247	475
Large water meters	300	2,400	45%	562	1,080
City-owned construction water meters	200	96	45%	15	29
City facility water meters	1,000	298	100%	517	993
Commercial water meters	17,500	64	45%	875	1,680
Total Estimated Water Savings	**20,000**			**2,216**	**4,257**
Estimated Water Savings in Reclaimed System	*1,000*			*247*	*475*
Estimated Water Savings from Colorado River demand	*19,000*			***1,969***	***3,782***

Question #8:

Map 1.

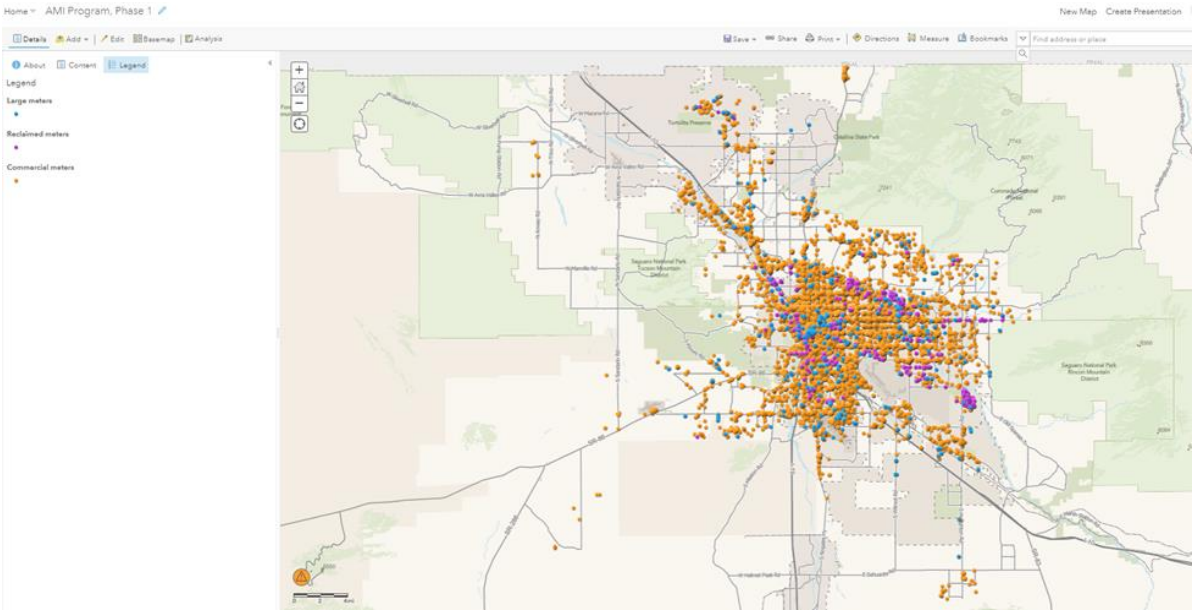

Question #10:

Graph 1.

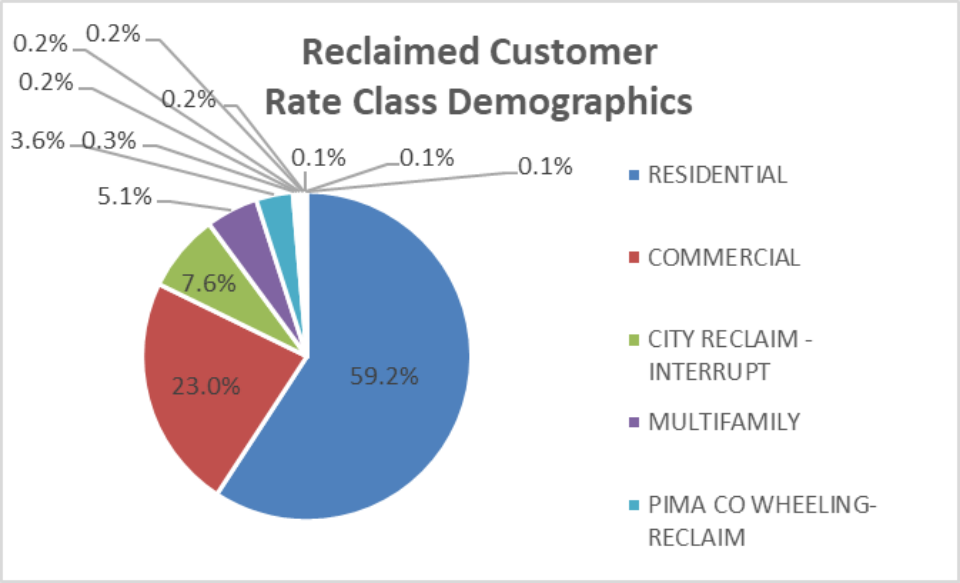

Table 2.

Rate Class Demographics	
Row Labels	**Distinct Count of Meter Number**
RESIDENTIAL	59.2%
COMMERCIAL	23.0%
CITY RECLAIM - INTERRUPT	7.6%
MULTIFAMILY	5.1%
PIMA CO WHEELING-RECLAIM	3.6%
FW-RECL INTERRUPT/ENV FEE	0.3%
U OF A RATE	0.2%
CONSTRUCTION	0.2%
GOLF COURSE AGRM - RECL	0.2%
DAVIS MONTHAN REC	0.2%
ORO VALLEY RECL INTERRUPT	0.1%
DUPLEX/TRIPLEX	0.1%
GB COMMERCL CONTRACT 2004	0.1%
Grand Total	**100.0%**

Graph 2.

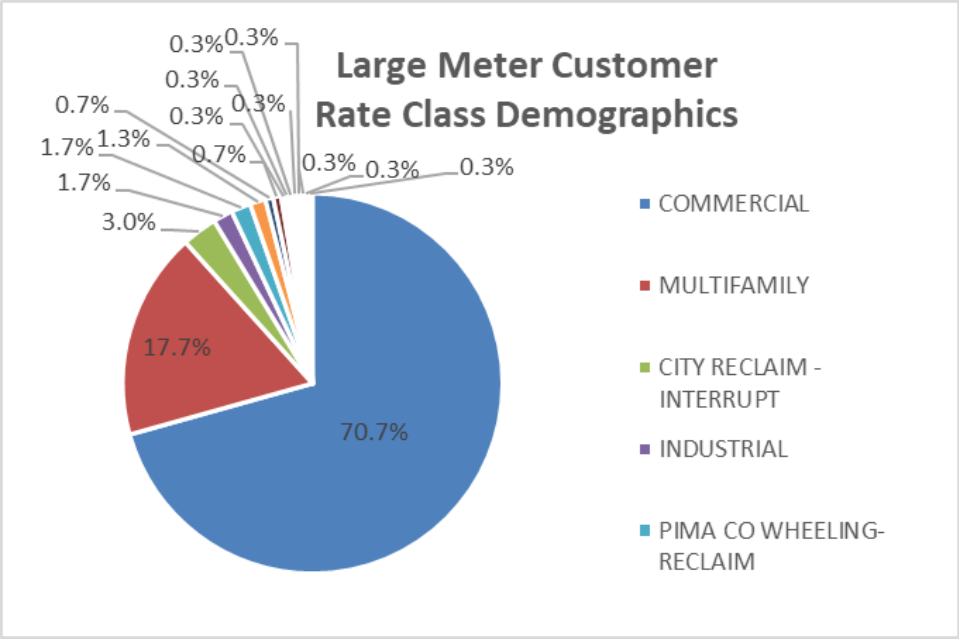

Table 3.

Rate Class Demographics	
Row Labels	**Distinct Count of Meter Number**
COMMERCIAL	70.7%
MULTIFAMILY	17.7%
CITY RECLAIM - INTERRUPT	3.0%
INDUSTRIAL	1.7%
PIMA CO WHEELING-RECLAIM	1.7%
SUBMETERED MH PARK	1.3%
U OF A RATE	0.7%
GOLF COURSE AGRM - RECL	0.7%
ORO VALLEY WHEEL NARANJA	0.3%
ORO VALLEY WHEEL HARDY	0.3%
DAVIS MONTHAN REC	0.3%
ORO VALLEY WHEEL BUENAVST	0.3%
ORO VALLEY WHEEL CNTRYSDE	0.3%
VAIL WATER - WHEELING	0.3%
49ER SPEC POTABLE/RECLAIM	0.3%
ORO VALLEY RECL INTERRUPT	0.3%
Grand Total	**100.0%**

Water Conservation Grant Fund Application Evaluation
Round 1

City of Tucson - Automated Metering Infrastructure (AMI) Program Phase 1	**WC1-053-2023**
Grant Amount	$3,000,000.00
Category	Advanced Meters
Summary	Tucson Water will replace outdated water meter and endpoint technology with AMI meters, electronic endpoints, and an associated network of communication equipment. This activity will impact over 20,000 potable and reclaimed water meters across Commercial, Construction, Multifamily, Residential, and Municipal customers in Tucson Waters' service area. By providing near real-time data to water system operators and to customers, the program is expected to result in annual water savings of an estimated **6.3% to 12.1%** which totals 2,216 to 4,257 acre-feet for the targeted meter groups, currently lost to leaks and inefficient water use. To summarize, the program will produce water conservation results across Tucson's reclaimed and potable water systems through two primary avenues: leak detection and behavior change. The program area covers approximately 398 square miles of Tucson Water's water service areas located in and around the Tucson metropolitan area. The proposed infrastructure improvements to the System will be in the City of Tucson, unincorporated Pima County, the Town of Marana, and the Town of Oro Valley. 1) Reclaimed Water Meters: Tucson Water provides recycled water to over 1,000 sites across the City of Tucson, unincorporated Pima County, the towns of Marana and Oro Valley. The sites include private customers, common areas, right-of-way irrigations, public and private golf courses, parks, and numerous public and private schools. The system provides a benefit to the entire population of the Tucson Water service area (approximately 745,000) as well as towns of Marana and Oro Valley by reducing reliance on mined groundwater and on Colorado River water delivered via the Central Arizona Project (CAP). This portion of the program would convert the entire reclaimed water meter system to smart meters. 2) Large Water Meters: Large water meters are those meters with a 3-inch bore and greater. Tucson Water services and maintains approximately 300 large meters. These are for commercial and multi-family customers across the City of Tucson, unincorporated Pima County, the towns of Marana and Oro Valley as well. These meters are the highest individual consumers of water with an average consumption of 2,400 CCFs per month. Smart meters would benefit this population of the highest water users.

	3) City-owned Construction Water Meters: Construction water meters, also known as fire-hydrant meters, are utilized in construction projects. These meters are used on a short-term basis and are moved around the entire Tucson Water service area driven by the demand of development across the region. Presently contractors submit their meter reads for tracking and billing. Additionally, contractors may use privately owned construction meters. However, private meters will soon be phased out and only City-owned construction meters will be utilized. This subgroup of meters totals approximately 200 meters. 4) City Facility Water Meters: City of Tucson facilities represent over 1,000 water meters at locations that include City buildings, parks, golf courses, right-of-way irrigation, and fire protection. The City and Tucson Water strive to set a community example for water conservation. Smart meters at these facilities will enable detailed tracking of City water usage and enhance leak detection capabilities, leading to reductions in the City's annual water consumption. 5) Commercial Water Meters: Lastly, the largest subgroup of meters in this conservation program are the meters serving commercial rate class customers, which total approximately 17,500 meters. These locations spread across the Tucson Water service area including businesses in the City of Tucson, unincorporated Pima County, and the towns of Marana and Oro Valley.
Location	City of Tucson, Pima County
Estimated water savings in acre-feet per year	4,257
Duration of project/program	Two years – estimated completion to install 20,000 endpoints and replace incompatible out-of-date meters. Applicant noted the useful life of the meters is 20-years. Applicant expects conservation benefits to continue well into the future.

Conservation Activity Benefits and Results
Statutory Evaluation Criteria #1, #2, and #4

Activity Type	Programs and projects that reduce water use Per A.R.S. 49-1332(B)(2)
Source of water	Tucson Water's primary potable water resource is Colorado River water delivered through the CAP canal. AMI conversion of potable water meters in the categories of large water meters, construction meters, City facility water meters, and commercial water meters will directly result in annual reductions of the City's Colorado River water consumption by an estimated

	1,969 to 3,782 acre-feet. Tucson Waters reclaimed water system provides a benefit to the entire population of its service area and to neighboring jurisdictions by reducing reliance on Colorado River water delivered via the CAP. Conversion of all reclaimed water meters to smart meters is expected to reduce reclaimed water consumption through leak detection and increased customer efficiencies in the amount of 247 to 475 acre-feet annually. Unconsumed reclaimed water will be recharged in local aquifers and held as long-term storage credits. In times of water resource shortage, these may later be withdrawn in place of future Colorado River deliveries.
Community information	The population impacted by this conservation program includes the over 20,000 customers associated with the five targeted meters groups for the: reclaimed water meter system, large water meters, City-owned construction meters, meters at City facilities, and commercial water meters. Although this segment of the population accounts for less than 10% of all Tucson Water meters and customers, their consumption makes up more than 50% of Tucson Waters customer water demand. The demographics for each of these groups is broken down below.
Costs and benefits of project/program	The cost for this conservation program to install the AMI meters and endpoints is $4,000,000. The most significant impact of this program will come in the form of water conservation benefits. Research from the American Water Works Association (AWWA) has shown AMI leads to an average daily water savings in the range of 6.3%-12.1% for engaged customers. Additionally, AMI allows for near real-time leak detection. Whereas current leak detection often occurs only where there are obvious signs of leaks, i.e., water in the street or when customers notice irregularities in their monthly bills. Currently, Tucson Water Utility Service Technicians respond to over 3,000 leak work orders per year. With AMI, the utility and its customers will be able to proactively address and repair leaks. The applicant points out the following environmental benefits: serve as a valuable water conservation tool, provide detailed water usage tracking, reduce non-revenue water, enhance customer service, reduce costs to customers, improve customer service efficiency, and improve operational efficiency.

Funding Sources

Statutory Evaluation Criteria #3 and #5

Eligibility for LTWAF or WSDF	Applicant indicates it is not eligible for either the LTWAF or the WSDF loan programs.

	WIFA believes that Tucson is an eligible entity for the LTWAF but the applicant did not note if taking a loan from the LTWAF would be impractical for this activity.
Leverage of multiple funds	This conservation activity will leverage committed Capital Improvement Program (CIP) utility funds. Tucson Water has two multi-year CIPs related to this conservation program. They are a Small Meter Replacement CIP and a Large Meter Replacement CIP. These CIPs are an effort to update identified out-of-date meters based on age and overuse, where their performance to accurately measure water consumption is declining. This is also an opportunity to replace these meters with meters that are compatible with AMI endpoints, which is critical to this conservation program. These CIPs provide matching funds while also elevating the metering infrastructure to be compatible with AMI.
Source of funding and match	Source: Capital Improvement Program Funding Match amount: $1,000,000

Capacity, Feasibility, & Public Comment
Statutory Evaluation Criteria #6, #7, and #8

Qualifications and capacity of applicant	This program will be completed and managed by Tucson Waters Customer Service Division (CSD), which consists of the Metering and Field Services staff responsible for installing, servicing, and repairing water meters, and the Customer Solutions Center staff, which is responsible for managing customer account, consumption, and billing information. In total, the CSD is staffed by 152 full-time employees. Within this group, the CSD Field Services Leadership Team is actively recruiting for a full-time AMI Project Manager, with an estimated start date of July 2023. Regardless of the funding source for Tucson Waters AMI Program, the AMI Project Manager will be tasked with overseeing the utility's transition to AMI technology over the next phases of AMI expansion. Until a full-time Project Manager is on-boarded for this program, it will be managed by the CSD Field Services Leadership Team. This includes: Superintendent: Reyna Woods Assistant Superintendents: Marcos Arenas, Monica Gallegos, and Shane Gerbig Management Analyst II: Sasha Geschwind

	The Leadership Team has already conducted a successful AMI pilot program and is qualified and prepared to oversee an expanded program.
Feasibility of project/program	The applicant states that successful completion of this activity within the required timeframe is highly feasible. Tucson Water conducted an AMI Program Pilot from May-December 2022, building familiarity with AMI technology among key utility staff. As a result, Tucson Water is prepared to expand its AMI Program to Phase 1, entailing more than 20,000 additional AMI endpoints as proposed in this conservation activity.
Public comments	Tucson reports ample community and sector support for this conservation activity. The Citizens Water Advisory Committee has expressed eager support for AMI. AMI is in line with City Council established climate change mitigation plans and it is supported by Tucson Waters One Water 2100 Master Plan, which relies heavily upon diverse stakeholder input from the community.

Technical Review:

The Applicant **has a current SAM.GOV UEI #** which allows them to apply for federal funds.

The applicant has completed all steps in the grant application process and is requesting funding for a project / program that is acceptable under the regulations. Tucson believes they will have 6 – 12% water savings with this project.

Automatic AMI / AMR Metering Infrastructure:

A recent AWWA study finds that water consumption feedback informed by AMI data and facilitated by a SmartH2O digital platform is associated with substantial water savings of about 8% in the long term. Normal studies show anywhere from 2 to 10% water savings with AMI/AMR water meters.

Expenditure Code 5.8 Clean Water: Water Conservation

ARPA Final Rule (31 CFR Part 35 RIN 1505–AC77) defines water infrastructure projects as "eligible projects under the Clean Water State Revolving Fund." "A project shall meet the criteria of CWSRF eligibility found in Section 603(c) of the Clean Water Act (CWA)". Specific Expenditure Codes were created to define activities available under the water infrastructure category.

The Interagency Service Agreement (ISA-ARPA-WIFA-070122-01) between the State of Arizona, Office of the Governor and WIFA required the project / program be specific to Expenditure Code 5.8 Clean Water: Water Conservation.

Water Conservation Grant Fund Application Evaluation
Round 1

WIFA staff find this project / program is consistent with Expenditure Code 5.8 Clean Water: Water Conservation as determined in Section 603c of the Clean Water Act (CWA) and the ISA.

Attachments:

- Tucson AMI Application - WC01-053-2023
- Budget
- Supplemental Information

Evaluation Criteria Statutory Reference:

49-1334. **<u>Evaluation criteria for water conservation programs and projects from the water conservation grant fund; procedures</u>**

The authority shall determine the order and priority of water conservation programs and projects proposed to be funded in whole or in part with monies from the water conservation grant fund based on the following, as applicable:

1. The extent to which the water conservation program or project achieves one or more of the results prescribed by section 49-1332, subsection A.
2. The costs and benefits of the water conservation program or project, including environmental costs and benefits.
3. If the water conservation program or project is eligible for funding from the long-term water augmentation fund established by section 49-1302 or the water supply development revolving fund established by section 49-1271 and if the nature of the water conservation program or project makes funding from the long-term water augmentation fund or the water supply development revolving fund impractical.
4. The ability to provide multiple benefits.
5. The degree to which the water conservation program or project will maximize or leverage multiple available funding sources, including federal funding.
6. The qualifications and capacity of an applicant.
7. The feasibility of the water conservation program or project.
8. Public comments.

WCGF Committee Evaluation:

☐ Recommend Rejection of Grant Application

☐ Recommend Approval of Grant Application

☐ Recommend Approval of Grant Application with Modifications

Tab 12

AGENDA ITEM:

Recommend Approval of Grant Application WC1-058-2023 – Verde Natural Resource Conservation District – WCGF – $2,998,732

ACTION REQUIRED:

Review, Discuss & Recommend Approval

PREVIOUS ACTION:

None

STAFF CONTACT:

Lindsey Jones

RECOMMENDED DISCUSSION TIME:

5 Minutes

ATTACHMENTS:

- Grant Application WC1-058-2023 – Verde Natural Resource Conservation District
- Water Conservation Grant Fund Evaluation

STAFF COMMENTS:

None

Camp Verde Irrigation Piping Program

Profile : nortonchip@gmail.com

Entity Name: : Verde Natural Resource Conservation District

I. General Information

1. Title of Project: : Camp Verde Irrigation Piping Program

2.Type of Conservation Activity (A.R.S. § 49-1332(B)): : Programs or projects to improve groundwater conservation and surface water flows.

Note: for the purpose of the application, the term project and program will be referred to as “conservation activity”

3. Is this for an individual Water Conservation Project or a general Water Conservation Program? : Water Conservation Programm

Please describe the specific components that make it a program. : Program Summary: The proposed program is designed to support the piping of irrigation ditches in the Verde Valley to improve water use efficiency and supply reliability. The program will work with ditch companies to prioritize piping areas based on the highest seepage loss per dollar invested. Factors such as soil type, slope, maintenance regime, access, and project cost will be considered in selecting the most suitable areas for piping. Projects that will generate the highest volume of water savings for the estimated costs will be awarded. The Verde Natural Resource Conservation District (NRCD), The Nature Conservancy, and three prospective ditch companies have already identified stretches of irrigation ditches that would benefit from being piped and meet the program requirements. The program will work with a qualified engineer to assess the total cost and seepage of each potential section and prioritize them accordingly. The Program will also include hiring a project manager for the Verde NRCD to manage the projects under this program. The Nature Conservancy will use leveraged funds from corporate donors as match for the program. The piping will be done using High Density Polyethylene (HDPE) fusion weld pipe, an industry-standard for industrial and municipal water conveyance that is projected to last over 100 years. Overall, the program aims to improve water use efficiency and supply reliability, which will have positive impacts on agriculture, downstream water users, and the environment. Program Rules: Eligibility: The program is open to irrigation companies in the Verde Valley downstream of Oak Creek with more than 5 users. Project Scope: Projects must involve the piping of dirt-lined open canals with HDPE pipe. Individual projects under the program must be at least 500 feet in length. Water Savings: Projects must demonstrate a water savings of at least 6% per mile of pipeline. Water savings will be calculated based on the difference between the current water use and the estimated water use with the HDPE pipe installed. Cost-Effectiveness: Projects will be evaluated based on the cost-effectiveness of the proposed water savings. Projects with the highest water savings for the cost will be prioritized. Likelihood of Success: Projects will also be evaluated based on the likelihood of success. Factors that will be considered include the feasibility of the proposed project, the level of community support, and the availability of necessary resources. Compliance: Grant recipients must comply with all applicable laws, regulations, and guidelines related to the project. Budget: Grant funds may be used for project-related expenses, including materials, labor, and equipment. Budgets must be reasonable, necessary, and directly related to the project. The Verde NRCD will

manage the relationship with the ditch companies. The Ditch Companies will establish contracts with contractors and vendors to complete the projects. Timeline: Projects must be completed within a reasonable timeframe, as determined by the grant committee. Evaluation: The program will be evaluated periodically to ensure that it is achieving its objectives and meeting the needs of the community.

4. What is the location of conservation activity?

City: : Camp Verde

County: : Yavapai County

Program/Project Congressional District (check all that apply) :

2

Program/Project Legislative District (check all that apply) :

1

Watershed : Verde Watershed

Active Management Area (if applicable): : N/A

Irrigation Non-Expansion area (if applicable): : N/A

5.Conservation Activity Cost

Amount requested from the WCGF for this activity: : $2,998,732.00

Amount of matching funds: : $749,683.00

Total conservation activity cost: : $3,748,415.00

When applying for the grant, note that a single water conservation program grant may not exceed $3,000,000. A single water conservation project grant may not exceed $250,000. The WCGF requires at least a twenty-five percent match for each water conservation program or project.

6. What is the estimated water savings in acre-feet per year? : 1,955

Explain calculation: : We estimate water savings of 8.3% per mile based off field measurements and other indicators of loss. We estimate that the program will be able to pipe 14,100 feet of irrigation ditch with this funding. With an average diversion rate of 12 cfs, we would save 1,955 acre-feet annually. To estimate seepage loss in unlined ditches, we have used surface area and soil infiltration rate values that are representative of a one-mile section on the Eureka Ditch, Pioneer Ditch, and Verde Ditch. It is important to note that although the seepage loss estimations were based on these three ditches, the program does not exclude the possibility of piping opportunities for any other eligible ditch in the Verde Valley. These representative values were calculated from analysis of vetted soil and cross-sectional data on each of the three ditches, explained below. An analysis of soil types on each ditch

was conducted using data from the NRCS Web Soil Survey and found that each ditch is comprised of 4-11 soil types ranging from well drained to excessively drained, primarily characterized as sandy loam. We utilized the lower limit of the range of infiltration rates for sandy soils as presented in Introduction to Soil Physics by David Hillel (1982), which is 0.8 inches of water loss per hour. We used this infiltration rate to represent the seepage rate for sandy loam soils within all three ditches and converted this value to feet per second (0.000018519 feet per second) for our estimate. We calculated a representative surface area by analyzing flow data from 2016-2022 and calculating wetted perimeter values from select monitoring sites within the most critical sections of each ditch. The median value for wetted perimeter on each ditch was used to calculate the average wetted perimeter of all three ditches, a representative value of 10.22 feet. We then used this value to calculate the representative surface area of a one-mile section of ditch, resulting in approximately 53,962 square-feet. Water infiltrating into the representative soil type, sandy loam soils, at a rate of 0.000018519 feet per second, over a representative surface area of 53,962 square-feet is an approximate water loss of 1 cfs per mile, and 2.7 cfs over 14,100 feet of piping. In total, projects funded by the program would save approximately 1,955 acre-feet per year of water.

7. What is the expected duration of the conservation activity? : We anticipate this program to last 3 years to compete all proposed piping activities.

II. Conservation Activity Benefits and Results

8. What is the water conservation activity you propose to fund with grant monies? Describe in detail. : The proposed irrigation piping program is aimed at addressing the significant issue of seepage and leakage loss associated with irrigation diversion from the Verde River and West Clear Creek. By piping irrigation ditches, the program aims to completely eliminate these losses and reduce the amount of water needed to be diverted from the river, while still delivering water to stakeholders. Most irrigation ditches in the Verde Valley were dug by hand using shovels, pickaxes, and other tools in the late 1800s. They are still largely dirt lined, conveying water for miles from their source stream to farmland throughout the valley. However, water loss through conveyance due to seepage and leakage is a significant issue, and the cost of fixing it through piping or lining is usually not feasible for small ditch associations that maintain the ditches. As a result, ditch companies increase their diversion rate to deliver water to stakeholders, resulting in increased water diversion from the river and frequent leaks. The program will prioritize piping sections that can save the most amount of water. This will not only improve surface water flows in the Verde River watershed but also reduce structural water use and benefit fish, wildlife, and recreation by keeping more water in the river. Additionally, the program will improve water security for farmers who rely on this water. We have identified at least three irrigation ditches, which total 24 miles, who want to participate in the program and stretches on each of these ditches that have seepage rates that meet our program requirements. Two of these ditches have provided letters of support expressing their commitment to engage in these projects; the third ditch does not have a formal board but the largest landowner in this ditch (Hauser and Hauser Farms) has submitted a letter of support. Furthermore, within the program area, there are an additional five irrigation ditches that have yet to be contacted but will be approached if the program receives funding. If funding is awarded to this program, we will work with a qualified engineer to look at the design and costs associated with piping various sections of each of these ditches and use that data to rank our priority for piping. This will ensure the maximum water savings per dollar invested in the program The proposed conservation activity encompasses a systematic and comprehensive process that includes: - Engaging the project manager of the program to initiate communication with the eight irrigation ditch companies, exploring potential projects and scoping their feasibility. - Securing the services of a qualified engineer who will contribute to the design of the irrigation system, ensuring its efficiency and effectiveness. - Collaborating with the irrigation ditch companies and the engineer to identify specific stretches along the ditches that meet the stringent requirements of the program. - Generating a final design and comprehensive material list that encompasses the appropriate pipe size and water control structures necessary for the successful implementation of the projects. - Conducting a ranking and approval process for the identified projects, ensuring that each one aligns with the objectives and priorities of the program. - Managing the procurement of the required materials from a reputable HDPE pipe vendor, ensuring the quality and

suitability of the materials for the proposed installations. - Contracting with a professional construction company specialized in pipeline installations to execute the project, following the engineering design specifications. - Overseeing the entire pipe installation process to guarantee strict adherence to the established engineering specifications and securing stakeholder approvals. This comprehensive approach ensures that each step of the program is executed with care and precision, leading to the successful implementation of the proposed conservation activities The Project Manager hired by the NRCD will work with the NRCD and partners to manage this process. This process has been successfully implemented in previous piping projects completed by the Verde Program of The Nature Conservancy, who are partners in this program. In summary, the proposed irrigation piping program is a crucial step towards addressing the significant issue of seepage and leakage loss associated with irrigation diversion in the Verde Valley. By prioritizing piping sections that can save the most amount of water, the program will have a direct impact on improving water flows and reducing water use, benefiting the environment and farmers who depend on this water.

9. What is the source of the water that will be conserved? If it is mainstem Colorado River water or Colorado River water delivered through the Central Arizona Project, please clearly indicate so. : The source is surface water from the Verde River and West Clear Creek. The Verde River's water is fed by numerous springs and tributaries. West Clear Creek is fed from natural springs and snowmelt.

10. Describe the community (population size, demographics, principal economic activities, etc.) impacted by the conserved water. : This will project will benefit people in the Camp Verde community and downstream water users on the Verde River including those in the Phoenix Metro Area. Camp Verde is a town located in Yavapai County, Arizona, United States. As of the 2020 census, the population of Camp Verde was estimated to be around 12,600. The town is situated in the Verde Valley, approximately 86 miles north of Phoenix and 60 miles south of Flagstaff. The demographic makeup of Camp Verde is predominantly White, with a significant Hispanic or Latino population. According to the United States Census Bureau, the racial makeup of the town is 72.8% White, 16.7% Hispanic or Latino, 6.7% Native American, and smaller percentages of other racial groups. The principal economic activities in Camp Verde are related to tourism, agriculture, and retail. The town is known for its natural beauty and outdoor recreational opportunities, including hiking, camping, and fishing. Agriculture plays an important role in the local economy, with many farms and ranches producing crops such as corn, alfalfa, and pecans. Retail is another significant industry in Camp Verde, with numerous stores, restaurants, and other businesses serving both tourists and local residents. Overall, Camp Verde is a small town with a diverse population and a mix of economic activities with a focus on tourism, agriculture, and retail.

11. What is the extent to which your water conservation activity achieves one or more of the following (select all that apply): :

value1

value2

value3

Describe: : Long-term reductions in water use: This project aims to completely eliminate seepage and leakage losses associated with irrigation diversion from the Verde River and its tributaries by piping sections of canals in the Verde Valley. By doing so, the project will result in significant long-term reductions in water usage, as less water will be needed to be diverted from the river to deliver the same amount of water to stakeholders. Projects will demonstrate water savings of 8.3% per mile of pipeline, and the cost-effectiveness of the proposed water savings will be evaluated, with projects that have the highest volume of water savings for the estimated costs being awarded. These criteria will ensure that the projects that are funded are those that will have the greatest impact on reducing water usage and achieving the program's objectives. This project will deliver long-lasting water savings, with a

projected lifetime of up to 100 years. HDPE pipe, which is the industry standard for industrial and municipal water conveyance, is designed to last up to a century. By fusing the pipes together with high heat, we create one continuous pipe that is impervious to leaks, ensuring maximum efficiency and durability. With the elimination of leaks and seepage, we can guarantee that the water conveyed through these pipes will remain secure and sustainable for the full duration of the project's lifetime. Improvements in water use efficiency: The piping of irrigation ditches will result in a significant increase in water use efficiency by reducing seepage and leakage losses. The program will achieve an estimated 8.3% per mile increase in water use efficiency on all piped irrigation canals. By reducing water losses through conveyance, ditch managers will be able to divert less water from the river while still delivering the same amount of water to users in the Verde Valley. This will result in long-term reductions in water usage, as less water will need to be diverted from the river for irrigation purposes. Additionally, the program may incentivize farmers to adopt more water-efficient irrigation practices, further improving water use efficiency in the long term. Improvements in water reliability: This project will also improve water security for farmers in the Verde Valley and downstream water users. As the Verde River suffers from reduced baseflows from drought, climate change, and development, surface water users are at risk of a depleted and less reliable water supply. By improving conveyance efficiency on irrigation ditches, we improve water security for farmers reliant on flows, secure water for downstream users, and improve continuous flows in the rivers for fish, wildlife and recreation.

12. What is the extent to which your water conservation activity addresses one of more of the following: :

Water supply shortages

Reliance on non-renewable water supplies

Groundwater depletion

Water quality issues

Natural disasters that may impact water supply infrastructure

Describe: : Water supply shortages: Baseflows in the Verde River are declining. Flows are threatened by climate change, drought and increasing development. This threatens water supplies for people and instream flows for fish, wildlife and recreation. These piping projects aim to reduce the amount of water that irrigation ditches divert from the river for the benefit of fish, wildlife, and recreation, while increasing water security for the surface water users that rely on it. Reliance on non-renewable water supplies: Although the Verde River and its tributaries are technically renewable water supplies, as flows are decreased by climate change, drought, and development, water use will have to be supplemented with groundwater supplies. The groundwater aquifers that would supplement these water supplies are part of a complex hydrological system that includes both renewable and non-renewable sources of water. While some of the groundwater in the area is being replenished by natural processes, other parts of the aquifer are being depleted faster than they are being replenished, leading to a decline in the overall water table. Creating more efficiency in surface water usage, while reducing the amount of water that will need to be supplemented with non-renewable groundwater supplies. Groundwater depletion: Baseflow in the Verde River near the Verde Valley has declined significantly over the past three decades as a result of prolonged drought and increasing demand. This decline is baseflow indicates declines in groundwater contribution to the river. In order to continue to maintain current flows, projects like this are critical. These projects reduce surface water demand buffer the impacts of groundwater pumping. Water quality issues: Water quality will be improved through dilution and reduced sediment transport. A central part of this project is leaving more water in the Verde River and its tributaries. The effect of having more water instream is improved water quality. Additionally, these projects will also reduce sediment transport. Irrigation canals that are dirt lined pick up sediment and often deposit excessive sediment back into their source stream as return flows. Natural disasters that may impact water supply infrastructure: High-density polyethylene

(HDPE) pipes are known to be resistant to natural disasters like earthquakes, hurricanes, and floods. HDPE pipes are flexible, which means they can absorb shock and strain, reducing the risk of damage during an earthquake. HDPE pipes are also resistant to corrosion, which makes them ideal for areas with a high risk of floods, where exposure to corrosive materials is a concern. During a flood, HDPE pipes can remain operational as they are designed to withstand high pressure and high flow rates. They are also resistant to abrasion, which is beneficial during a flood when debris and sediment can cause significant damage to pipelines. Open, dirt lined, irrigation canals are more susceptible to natural disasters considering the effects from floods, hurricanes and earthquakes such as erosion, damage to the banks and walls of the ditch, leading to breaches and loss of water, and sedimentation of the ditches when floodwaters breach the headgates.

13. How will your water conservation activity align with a local, regional, or statewide water plan or integrated resource management plan? : The impacts of the proposed piping projects meet several goals and policies outlined in the Yavapai County Comprehensive Plan Update 2032, specifically within the Land Use, Open Space, Water Resource, and Environmental sections as described below: - Land Use Goal 8: Strive to protect and preserve Yavapai farming and ranching to ensure sustainable food production is located within the County; Policy 8a: Continue County efforts to protect and preserve farm and ranch land, especially those agricultural operations utilizing regenerative methods of agriculture to replenish the soil and natural environment. - Open Space Goal 3: Preserve and enhance recreational, cultural, historic and educational opportunities; Policy 3a: Prioritize the preservation of streamside recreational opportunities, such as swimming, kayaking, canoeing, rafting, and fishing - Water Resource Goal 4: Protect surface water and groundwater quality in the county; Policy 4j: Manage land use to protect the base flow, water quality and health of the Verde River and all other perennial surface waterways within Yavapai County. - Environmental Goal 1: Maintain a high level of water conservation. - Environmental Goal 8: Preserve natural landscapes and wildlife; Policy 8a: Protect ecosystems in riparian areas around perennial and intermittent streams, springs, rivers and lakes; Policy 8b: Protect Fossil Creek and the Verde River as the only remaining Wild and Scenic Rivers inside the state of Arizona. The proposed piping projects have the potential to return around 1,955 acre-feet per year of water to the Verde River and its tributaries by completely eliminating water loss during conveyance, while still reliably delivering water to users who depend on it. This will provide greater water security and reliability for farmers and ranchers, ensuring the sustainability and future of local food production in the Verde Valley. Furthermore, the increased baseflow resulting from the proposed projects will help support outdoor recreational opportunities and tourism along the Verde River and its tributaries, especially during the summer months when baseflow is typically at its lowest and tourism is at its peak. By piping unlined irrigation ditches, we can improve water quality by minimizing sediment transport while also safeguarding and enhancing the critical riparian habitat that help restrict the entry of nutrients and pollutants into our waterways. Preservation and improvement of riparian zones will also serve to support wildlife and maintain natural landscapes along the Verde River.

14. What are the costs and benefits of your water conservation activity, including any environmental impacts? : Costs: - Expense: Piping irrigation canals can be expensive to install, particularly if the terrain is difficult or if long stretches of pipeline are required. - System complexity: Piping systems can be more complex than open canals and may require additional infrastructure such as control valves and pressure regulators. - Loss of streamside vegetation: Many irrigation ditches have allowed for both native and non-native species to establish on the ditch banks. This has created an artificial riparian habitat which will usably be converted back to upland habitat once piping is complete. Benefits: - Water conservation: Piping irrigation canals can reduce water loss due to evaporation and seepage, particularly in arid regions where water resources are scarce. - Reduced maintenance: Usually ditch managers need to maintenance every foot of an irrigation ditch. Rockfalls, tree falls, breaches and contamination are common. With piped systems, maintenance is far reduced. - Increased efficiency: By reducing water loss, piping systems can increase the efficiency of water delivery. - Improved water quality: Piping canals can reduce the potential for contaminants and sediment to enter the water supply, which can improve the quality of the water for irrigation. - Reduced erosion: By reducing the velocity of water flow, piping systems can reduce erosion and sedimentation in watercourses. - Reduced

land use conflict: Piping systems can require less maintenance on open canals through private property. - Improved riparian habitat: The natural riparian area along the river will be improved by increased streamflow. - Improved upland habitat. Open irrigation ditch introduces many riparian species along the canal which would have otherwise been upland habitat.

15. How will you measure the effectiveness of the conservation activity? : We will be using three measures for evaluating the benefit of our projects. - Total water savings associated with piping: This will be based off of how much pipe is installed and the seepage factors associated with the area of ditch that are piped. - Stakeholder engagement: We will look at stakeholder satisfaction with the program. This will be entail interviewing the irrigation ditches and non-profit stakeholders to understand their satisfaction with the program. - Instream connectivity: The Nature Conservancy has a monitoring program that looks at inflow stream throughout the Verde River and West Clear Creek. The project will result in more instream flow and data regarding instream flow is recording in their program.

III. Funding Sources

16. If your water conservation activity is eligible for funding from WIFA's Long-Term Water Augmentation Fund or Water Supply Development Fund, does the nature of your conservation activity make funding from those funds impractical, and why? : No, it is not eligible.

17. Would the conservation activity be otherwise implemented without this grant funding? Explain. : No, without this grant funding, it is unlikely that the proposed conservation activity of piping irrigation ditches would be implemented. The high cost of large-scale piping projects, which can exceed a million dollars per mile, makes it financially unfeasible for the irrigation ditch companies to fund such projects on their own. The fees charged by these ditches to water users are typically too low to cover the expenses of major renovation programs. Additionally, most farmers who are the largest water users of these irrigation ditches operate on tight budgets and cannot afford the increased fees that would be required to fund these projects. Fees are always on a per irrigated acre basis, so farmers who irrigate the most land on the ditches often bear the brunt of fee increases. Smaller water users who do not rely on the water for their livelihoods may also be unwilling to pay higher fees to support such projects. In order to fund large-scale upgrade projects like this, irrigation ditch companies and other stakeholders must seek outside funding sources. While corporate funders have been the primary source of funding for projects like this in the past, these are typically smaller, one-off projects. Larger funding sources such as WIFA's Water Conservation Grant Funds are needed to support this critical program. There are other funding sources, from agencies such as BOR or NRCS, which could support these projects, but thus far, we have not had success in navigating those sources. Organizations such as The Nature Conservancy are engaging with those agencies to try to leverage other federal funding for piping projects which could be used as match for a program like this.

18. To what extent will your water conservation activity maximize or leverage multiple available funding sources, including federal funding? : This program is proposing to utilize match funding from The Nature Conservancy (TNC). TNC has leverage funding from corporate donors to support this project. That is outlined in their letter of support.

19. Are there cost-sharing opportunities with other applicants or other parties? Explain. : Yes, TNC has been engaging with corporate and foundational partners to provide match funding for this program. TNC has already utilized corporate and foundational funds to pipe nearly three miles of irrigation ditch in the past 5 years. Although these funding sources are unlikely to be able to fund large scale programs, they are very good sources for match requirements.

20. What is the source and amount of the match (including in-kind match)? : The match requirements will come from The Nature Conservancy. TNC is committed to securing $750,000 in match. They have secured $400,000 and are in the process of and committed to securing the remainder.

IV. Capacity, Feasibility, & Public Comment

21. What qualifications and capacity do you have for completing your proposed water conservation activity? Include any past managerial deficiencies and provide the name(s) and qualifications of the individual(s) or entities who will be managing this activity. : Chip Norton: - Chairman of Verde NRCD for over 5 years - Served as President of Friends of the Verde River for 12 years - Served on the County Resource Advisor Committee for 6 years - Retired engineer. Claudia Hauer - Owner of Hauser and Hauser Farms, which is the largest farming operation in the Verde Valley - Serving on two ditch boards (Diamond S and West Clear Creek Stakeholders) - Farm operator for 37 years. - Has served on the NRCD board for 1 year. Chris Jensen - Has served on NRCD board for over 8 years - Retired educator and Navy veteran - Serves on the board of the Verde River Valley Nature Organization. - Member of the Friends of the Verde River Brenda Hauser - Former Camp Verde Mayor - Former town council member - NRCD Supervisor for 7 years - Retired nurse with over 20 years of experience The Nature Conservancy - The Nature Conservancy will be partnering on this project. They have been managing irrigation infrastructure project in the Verde Valley for over a decade and have a dedicated staff in the Verde Valley for helping with this program.

22. Will there be significant management impacts as the result of the proposed conservation activity, or any technology associated with the conservation activity? (For example: additional costs or staffing requirements) : There will be improved management impacts as a result of this project. Piping an irrigation ditch can bring several management improvements, including a reduction in labor requirements. Ditch lined irrigation canals are susceptible to breaches, seepage, trees, and boulders falling into them, which can require significant labor to fix and maintain. By contrast, piped irrigation systems are more resistant to these issues and require less labor-intensive maintenance. Once installed, piped systems generally require less ongoing maintenance than open canals, which can free up labor resources for other tasks. Additionally, piped systems can be operated with fewer staff since they often require less manual intervention than open canals, which can be particularly beneficial for smaller operations with limited labor resources. Overall, piping an irrigation ditch can reduce labor requirements and improve the efficiency of water delivery, which can benefit farmers and land managers alike.

23. Will the proposed conservation activity promote collaborative partnerships to address water-related issues? Explain. : Yes, this project will foster collaborations among esteemed entities including irrigation ditch companies, non-profit organizations such as The Nature Conservancy and Friends of the Verde River, the local government entity NRCD, and the dedicated farmers in the Verde Valley community. The unwavering support demonstrated by each of these organizations is exemplified through their letters of endorsement, further underscoring the significance and potential impact of this project. These collaborative partnerships will serve as a strong foundation for success, leveraging the diverse expertise, resources, and shared vision of all stakeholders involved.

24. What is the stakeholder involvement in the conservation activity planning process? : The irrigation ditch companies, NRCD, and The Nature Conservancy will be the primary parties involved in the process. All three parties have already been involved in preliminary planning and have also engaged in other conservation projects.

25. Will the proposed conservation activity include public outreach and opportunities for the public to learn about the conservation activity? Explain. : Absolutely. The Natural Resource Conservation District regularly conducts Surface Water User Workshops, which offer opportunities for the public to learn about a variety of topics related to surface water use, such as adjudication, water rights, hydrology, and more. Additionally, the NRCD hosts Local Workgroup meetings where they gather input from the public to provide recommendations on local natural resource priorities and criteria for USDA conservation activities and programs. At the last local workgroup meeting, held in May of 2023, Insufficient Surface Water was ranked as the highest

priority resource concern by the public. Considering that this piping program is directly addressing this issue, if this program is funded, information about the piping program will be provided at the next meetings to encourage more participation and support. The goal is to create more piping programs through this outreach, thereby continuing the conservation work. There will be at least 2 surface water user workshop and 1 local workgroup meeting per year.

26. Is there community and/or sector support for the conservation activity? Explain. : We have received strong letters of support from esteemed entities who recognize the utmost significance of our program for the well-being of the Verde River and the preservation of agriculture in the Verde Valley. We have received endorsements from the Town of Camp Verde, Salt River Project, Friends of the Verde River, the Eureka Ditch, the Verde Ditch, and Hauser and Hauer Farms. These letters reflect a shared understanding of the vital role that our program plays in fostering sustainable water management practices and safeguarding the ecological and agricultural heritage of the region. Their support further validates the importance and potential impact of our initiative.

27. How feasible is it to complete your water conservation activity? Explain. : The feasibility of our water conservation activity is exceptionally high, underscored by the proven success of similar projects implemented in the area over the past five years by The Nature Conservancy and various irrigation ditch companies. Significant strides have been made, with nearly three miles of irrigation ditch effectively piped using HDPE fusion pipe in the Verde Valley. This accomplishment is a testament to the established network of reliable vendors and experienced contractors who have been instrumental in supplying and installing this cutting-edge pipe technology. Furthermore, the irrigation ditch companies possess a well-defined process for project completion, while the local community has demonstrated support for such transformative initiatives. As partners with The Nature Conservancy, who has spearheaded previous piping projects, we are confident in the feasibility of our undertaking. With existing infrastructure and widespread community backing, we are poised to make substantial progress in advancing water conservation and fortifying water security throughout the Verde Valley.

28. If the conservation activity is a continuation of ongoing activities, has the activity been shown to be effective? If a new activity, has the proposed project, technology, or technique previously been implemented? : The conservation activity proposed in this grant application is a continuation of ongoing activities that have already demonstrated their effectiveness. In the past five years, nearly three miles of irrigation ditch have been piped with HDPE fusion pipe, resulting in reduced water usage and improved water security. These piping endeavors have been completed by The Nature Conservancy in partnership with irrigation ditch companies and other environmental nonprofits. Stakeholders have expressed overwhelming support for these projects, and all of the irrigation ditches that have participated in piping projects have expressed interest in doing more. The Eureka Ditch and the Verde Ditch have already completed successful pipeline projects, and their willingness to participate in this program further indicates the effectiveness of these efforts.

29. Will the proposed conservation activity implement an established Best Management Practice? Explain. : Yes. The industry standard for piping irrigation ditches, and most other commercial water conveyance systems, is to use HDPE Fusion Pipe. HDPE pipes are strong, durable, and resistant to corrosion and chemical damage. They are commonly used for both high-pressure and low-pressure water applications, as well as for gas distribution systems.

Additional Supporting Documentation (pdf, jpg, word, excel) : WCGF Budget CV Irrigaiton Piping Program.xlsx

Additional Supporting Documentation (pdf, jpg, word, excel) : Letter of Support Documents (seven letters are saved here).pdf

Additional Supporting Documentation (pdf, jpg, word, excel) : Budget Narrative Camp Verde Piping Program.docx

Additional Supporting Documentation (pdf, jpg, word, excel) :

Additional Supporting Documentation (pdf, jpg, word, excel) :

Average Score :

# of Reviews : 0

# of Denials : 0

Please use the following link to view the Budget

Budget Worksheet :

View Budget Worksheet : https://portal.ecivis.com/#/peerBudget/89CFBB46-1C8F-49E5-9F26-11F68B08B68B

Application Goals :

View Application Goals : https://portal.ecivis.com/#/peerGoals/36CC9502-A822-4048-9714-13CBAE5F729F

Created by : zengine+36768@srm.ecivis.com

Record ID # : 50798579

Last change : 2023-05-19T23:44:11+0000

Grant Award Budget For:

FY 2023 Water Conservation Grant Fund (WCGF)

WATER INFRASTRUCTURE FINANCE AUTHORITY OF ARIZONA

Project Name:

Budget Items

Category	Title	Units	Unit Cost	Extended Cost	Direct Cost	Indirect Cost	Cost Share	
Personnel								
	Project Manager	2	$40,000.00	$80,000.00	$64,000.00		$16,000.00	This is funding to hire a project manager for three years.
Personnel Total		**0**	**$0.00**	**$80,000.00**	**$64,000.00**	**$0.00**	**$16,000.00**	
Fringe Benefits								
	Fringe Benefits	0	$0.00	$0.00	$0.00	$0.00	$0.00	
Fringe Benefits Total		**0**	**$0.00**	**$0.00**	**$0.00**	**$0.00**	**$0.00**	
Travel								
	Travel	0	$0.00	$0.00	$0.00	$0.00	$0.00	
Travel Total		**0**	**$0.00**	**$0.00**	**$0.00**	**$0.00**	**$0.00**	
Equipment								
	Equipment	0	$0.00	$0.00	$0.00	$0.00	$0.00	
	HDPE Pipe	14100	$114.00	$1,607,400.00	$1,285,920.00	$0.00	$321,480.00	This is the actual pipe that will need to be purchased for the program. This will only be purchased once engineering design is complete.
	Water control structures	14	$7,000.00	$98,000.00	$78,400.00		$19,600.00	This is for other parts of the pipeline, such as cleanout boxes, fitting, turnout gates, etc. These will be identified in the design phase of each project under the program.
	Flow Meter	3	$8,750.00	$26,250.00	$21,000.00		$5,250.00	Each project that is installed will include a flow meter so irrigation ditch companies can accurately monitor the flow rates in the pipe.
Equipment Total		**0**	**$0.00**	**$1,731,650.00**	**$1,385,320.00**	**$0.00**	**$346,330.00**	
Supplies								
	Supplies	0	$0.00	$0.00	$0.00	$0.00	$0.00	
Supplies Total		**0**	**$0.00**	**$0.00**	**$0.00**	**$0.00**	**$0.00**	
Contractual								
	Contractual	0	$0.00	$0.00	$0.00	$0.00	$0.00	
Contractual Total		**0**	**$0.00**		**$0.00**	**$0.00**	**$0.00**	
Construction								
	Construction	0	$0.00	$0.00	$0.00	$0.00	$0.00	
	Installation Contractor	14100	$110.00	$1,551,000.00	$1,240,800.00		$310,200.00	This funding is for contractors to install the pipe. The cost rates were based on off projects that have been completed in the Verde Valley over the last 5 years.
	Survey and Design	3	$15,000.00	$45,000.00	$36,000.00		$9,000.00	This is funding for the engineering design of the pipeline and surveying before construction.
Construction Total		**0**	**$0.00**	**$1,596,000.00**	**$1,276,800.00**	**$0.00**	**$319,200.00**	
Indirect Costs								
	Indirect Cost	0.1	$0.00	$340,765.00	$272,612.00	$0.00	$68,153.00	
Indirect Costs Total		**0**	**$0.00**	**$340,765.00**	**$272,612.00**	**$0.00**	**$68,153.00**	
Other								
	Other	0	$0.00	$0.00	$0.00	$0.00	$0.00	
Other Total		**0**	**$0.00**	**$0.00**	**$0.00**	**$0.00**	**$0.00**	
				Total Project Cost	Total Direct Cost		Total Cost Share	
				$3,748,415.00	$2,998,732.00		$749,683.00	The total cost of the Program will be $3,748,415. The total funding request under this grant is $2,998,732 with a match contribution of $749,683, which is greater than 25% of the funding request, and hence meet the funding requirment.

Budget Narrative

Camp Verde Irrigation Piping Program

The budget for the project consists of several categories, each serving a specific purpose in implementing the water conservation program.

Personnel: A total of $80,000 is allocated for hiring a project manager over a two to three-year period. These project managers will play a crucial role in overseeing and coordinating the program's activities. The Nature Conservancy will contribute $16,000 if its match funds to this.

Equipment: The equipment category includes the necessary items to facilitate the program's implementation. This includes the purchase of HDPE pipe amounting to $1,607,400, which will be acquired once the engineering design is completed. Additionally, water control structures such as cleanout boxes, fittings, and turnout gates, costing $98,000, will be identified during the design phase. Each project installation will also incorporate flow meters, totaling $26,250, to accurately monitor flow rates. Match funding will account for $346,330 of the total amount.

Construction: A budget of $1,596,000 is allocated for construction-related activities. This includes hiring installation contractors at a cost of $1,551,000, based on rates derived from previous projects in the Verde Valley. Additionally, $45,000 is allocated for surveying and design to ensure proper planning before initiating the construction phase. Match funding will account for $319,200 of this amount.

Indirect Costs: Indirect costs totaling $340,765 are accounted for in the budget. This represents 10% of the direct costs and covers administrative and overhead expenses associated with implementing the program.

Cost Share: The Nature Conservancy is committed to providing a match contribution of $750,000. Currently, they have secured $400,000, and efforts are underway to secure the remaining balance. This match contribution exceeds the required 25% of the funding request, demonstrating the commitment and support of The Nature Conservancy to the project.

The total project cost amounts to $3,748,415, with a direct cost of $2,998,732. The cost share contribution is $749,683, exceeding the minimum funding requirement. This comprehensive budget ensures that adequate resources are allocated to successfully implement the water conservation program in the Verde Valley.

THE NATURE CONSERVANCY
Arizona Business Unit
1819 E. Morten Avenue, Suite 100
Phoenix, AZ 85020

May 18, 2023

Verde Natural Resource Conservation District
P.O. Box 280
Camp Verde, AZ 86322

The Nature Conservancy (TNC) is pleased to express our strong support for the proposed project to pipe sections of the irrigation ditches in the Verde Valley. As a partner in this project, TNC is committed to securing $750,000 in match funding from corporate donors. $400,000 is secured and TNC will use best efforts to secure the remaining commitment.

TNC's community-based program in the Verde Valley is focused on ensuring healthy river habitat in the Verde and its many tributaries, modernizing agricultural infrastructure, investing in water supply systems, using science and monitoring to evaluate changes and adapt to the future, and protect the aquifers that feed the Verde River. Piping sections of the irrigation ditches aligns with our program goals, as it will help reduce water loss and improve water security for agriculture, while also protecting the health of the river ecosystem.

TNC has worked closely with the Verde NRCD for years, and we have a proven track record of successfully piping irrigation ditches throughout the Verde Valley. We have also worked with the irrigation ditch companies to identify stretches of the ditches that would benefit the most from piping.

We believe that this project will have a significant positive impact on the Verde Valley community and environment, and we are committed to providing the necessary match funding to ensure its success. We look forward to continuing our partnership with the NRCD and the irrigation ditch companies to implement this important project.

Sincerely,

Daniel Stellar
Arizona State Director
The Nature Conservancy

cc: Water Infrastructure Finance Authority of Arizona

Zack Heim, Director
Water Rights and Contracts
PAB38W | P.O. Box 52025
Phoenix, AZ 85072-2025
P: (602) 236-0589
zack.heim@srpnet.com | srpnet.com

May 15, 2023

Laurie Gehlsen
Grant Coordinator
Water Infrastructure Finance Authority
100 North 7th Avenue, Suite 130
Phoenix, AZ 85007

Re: Support for the Camp Verde Irrigation Piping Program request by Verde Natural Resource Conservation District

Dear Ms. Gehlsen,

On behalf of the Salt River Project (SRP), please accept this letter of support for the Camp Verde Irrigation Piping Program request submitted by the Verde Natural Resource Conservation District (NRCD) in Yavapai County, Arizona. We request your commitment to fund this project through the Water Conservation Grant Fund.

SRP operates the Salt River Federal Reclamation Project whose water supplies depend upon the Salt River and Verde River watersheds. SRP's rights to divert and deliver water were established, in part, by the Kent Decree (1910), which allocates the normal flow of the Salt and Verde Rivers for SRP's use. Piping portions of the Verde Valley's irrigation system upstream of SRP's service area should increase flows in the the Verde River and its tributaries during dry months when the river is particularly vulnerable. Increased flows will benefit downstream surface water right holders, including SRP, and instreamflow rights held by the Tonto National Forest. The program will also conserve water otherwise lost to evaporation and soil infiltration from open dirt irrigation ditches.

Many irrigation water providers in the Verde Valley operate water distribution systems that are over 100 years old. Damages and repairs to these systems are costly and time consuming. Piping would mitigate much of the repair costs associated with seasonal operation. Also, the current diversions for these irrigation ditch systems often require that the majority of the Verde River flow be diverted for irrigation in the summer months. Piping would allow a smaller amount of water to be diverted, since the pipes are frictionless and require much less pressure to move water. Diverting less water into the ditch results in more water in the river, especially during cricital months, which will lead to healthier flows in the Verde Valley and below.

Flows from the 190-mile Verde River are a lifeblood for Arizona. Many water users in the Verde Valley, multiple Native American Tribes, multiple National Forests, SRP shareholders and others have significant water rights to the Verde River and otherwise depend on the river for sustaining their economic well-being.

SRP is a strong supporter of water efficiency programs and believes that more efficient irrigation distribution systems in the Verde Valley may encourage landowners to adopt more efficiencies in their private operations. As a significant landowner on the Verde Ditch, SRP believes this program could also help prioritize conservation values and education in the program area.

Thank you for considering the Verde NRCD application and supporting water conservation values on the Verde River watershed. Should you have any questions concerning this letter, please do not hesitate to contact me at (602) 236-0589.

Sincerely,

Zack J. Heim
Director, Water Rights and Contracts

Cc: (via email only)
John Ford at The Nature Conservancy (john.ford@tnc.org)
Chip Norton at Verde NRCD (nrcdverde@gmail.com)

Town of Camp Verde

Gateway to the Verde Valley

♦ 473 S. Main Street, Suite 102 ♦ Camp Verde, Arizona 86322 ♦
♦ Telephone: 928.554.0023 ♦ Fax: 928.554.0023 ♦
♦ www.campverde.az.gov ♦

May 11, 2023

Dear Grant Committee,

I am writing to express our enthusiastic support for the proposed irrigation piping program in the Verde Valley. As a community that relies on agriculture as a key component of our economy, we understand the vital importance of secure and reliable water sources. We also recognize that the continued diversions from the Verde River for irrigation purposes can have significant impacts on the river's health and the wellbeing of the ecosystems it supports.

Camp Verde is located in the Verde Valley sub-basin of the Verde River Groundwater Basin. The Town straddles eighteen (18) miles of the Verde River and two major perennial tributaries, Beaver Creek and Clear Creek, join the river within the town limits. In addition, Oak Creek, another major tributary, joins the Verde two miles north of the Town limits, supporting river flow within the Town.

These watercourses support a rich riparian area and provide recreational opportunities for residents and visitors. The flow of the Verde River and its tributary streams is affected by surface water diversions for agriculture and large landscaped areas, and by groundwater pumping for public, domestic and industrial uses. These two water supplies are vitally important to the Town and are interconnected: groundwater discharge from the aquifer to the river and streams, via springs and seeps, supports year-round flow.

The proposed piping program addresses both of these issues by reducing seepage and leakage losses, thereby increasing conveyance efficiency and reducing the amount of water needed to be diverted from the river. This not only benefits farmers who rely on this water but also benefits the environment by keeping more water in the river for fish, wildlife, and recreation. By enhancing water supply reliability and security, this project will help to ensure the long-term sustainability of our town and the Verde Valley as a whole.

I wholeheartedly support this program and look forward to its implementation.

Sincerely,

Dee Jenkins
Mayor Town of Camp Verde

17 May 2023

Dear Grant Committee,

We, at the Eureka Ditch Company, are pleased to express our support for the proposed irrigation piping program. We understand the significant issue of seepage and leakage loss associated with irrigation diversion from the Verde River and the impact this has on our ability to deliver water to our stakeholders. By piping our irrigation ditch, we believe we can eliminate these losses and reduce the amount of water needed to be diverted from the river while still delivering water to our users.

As a company with a vested interest in protecting the source water flows of the Verde River, we believe that this project will help us to maintain water security for our farmers and stakeholders. We understand that this project will also benefit the environment and wildlife in the region by keeping more water in the river.

We are excited to participate in the program and look forward to working with you to achieve these important goals.

Sincerely,

Zach Hauser

President

Eureka Ditch Company

Verde Ditch
P.O. Box 2345
Camp Verde, AZ 86322
Office; 928-300-3013
Email; verdeditch@yahoo.com

May 17, 2023,

Verde Natural Resources Conservation District,
P.O. Box 280
Camp Verde, Arizona 86322

Dear Verde NRCD,

The Verde Ditch Company supports the proposed irrigation piping program, which we believe will have significant benefits for our shareholders and the environment. As the largest ditch on the Verde River, we are acutely aware of the issue of seepage and leakage loss associated with irrigation diversion, and we believe that piping our irrigation canal is the best way to eliminate these losses and reduce our reliance on river water while still providing water to our users.

We recognize that this project will improve water security for farmers in the Verde Valley and downstream water users, particularly as the Verde River suffers from reduced baseflows due to drought, climate change, and development. Additionally, we believe that this project will help to maintain the agricultural heritage of the Verde Valley, which is of great importance to our community.

We are proud to support this important project and look forward to working with you to achieve its goals.

Sincerely,
Al Dupuy, Verde Ditch District Commissioner

Verde Ditch Company

May 17, 2023

Water Conservation Grant Fund Review Committee
Water Infrastructure Finance Authority of Arizona
100 N 7th Ave Suite 130
Phoenix, AZ 85007

Dear WCGF Review Committee,

As Friends of the Verde River, we support the proposed irrigation piping program aimed at reducing seepage and leakage losses associated with irrigation diversion from the Verde River and West Clear Creek.

The Verde River is a precious resource that sustains life and community in the Verde Valley. However, in recent years, the river has experienced reduced base flows due to drought, climate change, and development. These challenges have threatened the health and vitality of the river, which provides essential habitat for wildlife and supports recreational activities.

By piping the Verde Ditch, Eureka Ditch, and Pioneer Ditch, the largest and longest canals in the Verde Valley, the program will prioritize the sections that can save the most amount of water. This will not only improve surface water flows in the Verde River watershed but also reduce structural water use and benefit fish, wildlife, and recreation by keeping more water in the river.

We believe that this program is an essential step towards restoring and maintaining the health and vitality of the Verde River. By reducing water loss through conveyance, the program will contribute to more reliable water supplies for all stakeholders while preserving the natural beauty and ecological integrity of the Verde River.

We urge you to support this vital program and invest in the long-term sustainability of the Verde River and the Verde Valley.

Sincerely,

Nancy L.C. Steele, D.Env.
Executive Director

17 May 2023

Dear Grant Committee,

I am writing to express our strong support for the proposed irrigation piping program in the Verde Valley. As the largest farmers in the valley, we rely heavily on diverted irrigation water to grow our crops and maintain our agricultural business.

Over the years, we have spent a significant amount of time and resources maintaining these ditches to reduce seepage and leakage, which is a significant issue that affects the efficiency of our irrigation systems. By piping these canals, we believe we can improve the efficiency of water delivery and reduce water losses, which will not only benefit us but also other stakeholders and the environment.

We understand the importance of preserving the agricultural heritage of the Verde Valley, and this program will play a significant role in achieving this goal. By improving water use efficiency and reducing diversion rates, we can help ensure that there will be enough water for agricultural production, even during times of drought.

Therefore, we fully support this program and want to participate in it to help preserve the agricultural future of the Verde Valley.

Thank you for your consideration.

Sincerely,

Claudia E Hauser

Hauser and Hauser Farms, Inc.

Camp Verde, AZ

Water Conservation Grant Fund Application Evaluation
Round 1

Verde Natural Resource Conservation District (NRCD) - Camp Verde Irrigation Piping	**WC1-058-2023**
Grant Amount	$2,998,732.00
Category	Agriculture System Upgrade
Summary	The proposed irrigation piping program is aimed at addressing the significant issue of seepage and leakage loss associated with irrigation diversion from the Verde River and West Clear Creek. By piping irrigation ditches, the program aims to eliminate these losses and reduce the amount of water needed to be diverted from the river, while still delivering water to stakeholders. The program will prioritize piping sections that can save the most amount of water. This will not only improve surface water flows in the Verde River watershed but also reduce structural water use and benefit fish, wildlife, and recreation by keeping more water in the river. Additionally, the program will improve water security for farmers who rely on this water. The proposed conservation activity encompasses a systematic and comprehensive process that includes: • Engaging the project manager of the program to initiate communication with the eight irrigation ditch companies, exploring potential projects and scoping their feasibility. • Securing the services of a qualified engineer who will contribute to the design of the irrigation system, ensuring its efficiency and effectiveness. • Collaborating with the irrigation ditch companies and the engineer to identify specific stretches along the ditches that meet the stringent requirements of the program.
Location	Camp Verde, Yavapai County
Estimated water savings in acre-feet per year	1,955
Duration of project/program	Three years for implementation. Applicant expects conservation benefits to continue well into the future.

Conservation Activity Benefits and Results
Statutory Evaluation Criteria #1, #2, and #4

Activity Type	Programs or projects to improve groundwater conservation and surface water flows.

Water Conservation Grant Fund Application Evaluation
Round 1

Source of water	The source is surface water from the Verde River and West Clear Creek. The Verde Rivers water is fed by numerous springs and tributaries. West Clear Creek is fed by natural springs and snowmelt.
Community information	This project will benefit people in the Camp Verde community and downstream water users on the Verde River including those in the Phoenix Metro Area. Camp Verde is a town located in Yavapai County, Arizona, United States. As of the 2020 census, the population of Camp Verde was estimated to be around 12,600. The town is situated in the Verde Valley, approximately 86 miles north of Phoenix and 60 miles south of Flagstaff. The demographic makeup of Camp Verde is predominantly White, with a significant Hispanic or Latino population. According to the United States Census Bureau, the racial makeup of the town is 72.8% White, 16.7% Hispanic or Latino, 6.7% Native American, and smaller percentages of other racial groups.
Costs and benefits of project/program	Costs: - Expense: Piping irrigation canals can be expensive to install, particularly if the terrain is difficult or if long stretches of pipeline are required. - System complexity: Piping systems can be more complex than open canals and may require additional infrastructure such as control valves and pressure regulators. - Loss of streamside vegetation: Many irrigation ditches have allowed for both native and non-native species to establish on the ditch banks. This has created an artificial riparian habitat which will usably be converted back to upland habitat once piping is complete. Benefits: - Water conservation: Piping irrigation canals can reduce water loss due to evaporation and seepage, particularly in arid regions where water resources are scarce. - Reduced maintenance: Usually ditch managers need to maintenance every foot of an irrigation ditch. Rockfalls, tree falls, breaches and contamination are common. With piped systems, maintenance is far reduced. - Increased efficiency: By reducing water loss, piping systems can increase the efficiency of water delivery. - Improved water quality: Piping canals can reduce the potential for contaminants and sediment to enter the water supply, which can improve the quality of the water for irrigation. - Reduced erosion: By reducing the velocity of water flow, piping systems can reduce erosion and sedimentation in watercourses. - Reduced land use conflict: Piping systems can require less maintenance

	on open canals through private property. - Improved riparian habitat: The natural riparian area along the river will be improved by increased streamflow. - Improved upland habitat. Open irrigation ditch introduces many riparian species along the canal which would have otherwise been upland habitat.

Funding Sources
Statutory Evaluation Criteria #3 and #5

Eligibility for LTWAF or WSDF	Applicant indicates it is not eligible for either the LTWAF or the WSDF loan programs. While they assess that they are not eligible, WIFA staff finds that they would meet WSDF eligibility. It is unclear whether this type of conservation program would be feasible with a repayment obligation under the WSDF.
Leverage of multiple funds	The program is proposing to utilize match funding from The Nature Conservancy (TNC). TNC has leverage funding from corporate donors to support this project. That is outlined in their letter of support.
Source of funding and match	The match requirements will come from The Nature Conservancy. TNC is committed to securing $750,000 in the match. They have secured $400,000 and are in the process of and committed to securing the remainder.

Capacity, Feasibility, & Public Comment
Statutory Evaluation Criteria #6, #7, and #8

Qualifications and capacity of applicant	Chip Norton: - Chairman of Verde NRCD for over 5 years - Served as President of Friends of the Verde River for 12 years - Served on the County Resource Advisor Committee for 6 years - Retired engineer. Claudia Hauer - Owner of Hauser and Hauser Farms, which is the largest farming operation in the Verde Valley - Serving on two ditch boards (Diamond S and West Clear Creek Stakeholders) - Farm operator for 37 years. - Has served on the NRCD board for 1 year. Chris Jensen - Has served on NRCD board for over 8 years

	- Retired educator and Navy veteran - Serves on the board of the Verde River Valley Nature Organization. - Member of the Friends of the Verde River Brenda Hauser - Former Camp Verde Mayor - Former town council member - NRCD Supervisor for 7 years - Retired nurse with over 20 years of experience The Nature Conservancy - The Nature Conservancy will be partnering on this project. They have been managing irrigation infrastructure projects in the Verde Valley for over a decade and have a dedicated staff in the Verde Valley for helping with this program.
Feasibility of project/program	The applicant describes the feasibility of this activity as exceptionally high, underscored by the proven success of similar projects implemented in the area over the past five years by The Nature Conservancy and various irrigation ditch companies. Significant strides have been made, with nearly three miles of irrigation ditch effectively piped using HDPE fusion pipe in the Verde Valley. They are confident in their partners - The Nature Conservancy, who have spearheaded previous piping projects.
Public comments	Verde NRCD believes they have strong support from esteemed entities who have written strong letters of support. They have received endorsements from the Town of Camp Verde, Salt River Project, Friends of the Verde River, the Eureka Ditch, the Verde Ditch, and Hauser and Hauer Farms.

Technical Review:

The Applicants **does not have a SAM.GOV UEI #** listed in their application materials. They will need to provide that # to WIFA prior to funding.

The applicant has completed all steps in the grant application process and is requesting funding for a project / program that is acceptable under the regulations.

Expenditure Code 5.8 Clean Water: Water Conservation

ARPA Final Rule (31 CFR Part 35 RIN 1505–AC77) defines water infrastructure projects as "eligible projects under the Clean Water State Revolving Fund." "A project shall meet the criteria of CWSRF eligibility found in Section 603(c) of the Clean Water Act (CWA)". Specific Expenditure Codes were created to define activities available under the water infrastructure category.

Water Conservation Grant Fund Application Evaluation
Round 1

The Interagency Service Agreement (ISA-ARPA-WIFA-070122-01) between the State of Arizona, Office of the Governor and WIFA required the project / program be specific to Expenditure Code 5.8 Clean Water: Water Conservation.

WIFA staff find this project / program is consistent with Expenditure Code 5.8 Clean Water: Water Conservation as determined in Section 603c of the Clean Water Act (CWA) and the ISA.

Attachments:

- Verde Natural Resource Conservation District (NRCD) - WC1-058-2023 Application
- Budget
- Letters of Support

Evaluation Criteria Statutory Reference:

49-1334. **<u>Evaluation criteria for water conservation programs and projects from the water conservation grant fund; procedures</u>**

The authority shall determine the order and priority of water conservation programs and projects proposed to be funded in whole or in part with monies from the water conservation grant fund based on the following, as applicable:

1. The extent to which the water conservation program or project achieves one or more of the results prescribed by section 49-1332, subsection A.
2. The costs and benefits of the water conservation program or project, including environmental costs and benefits.
3. If the water conservation program or project is eligible for funding from the long-term water augmentation fund established by section 49-1302 or the water supply development revolving fund established by section 49-1271 and if the nature of the water conservation program or project makes funding from the long-term water augmentation fund or the water supply development revolving fund impractical.
4. The ability to provide multiple benefits.
5. The degree to which the water conservation program or project will maximize or leverage multiple available funding sources, including federal funding.
6. The qualifications and capacity of an applicant.
7. The feasibility of the water conservation program or project.
8. Public comments.

WCGF Committee Evaluation:

☐ Recommend Rejection of Grant Application

☐ Recommend Approval of Grant Application

☐ Recommend Approval of Grant Application with Modifications

Tab 13

AGENDA ITEM:

Recommend Approval of Grant Application WC1-060-2023 – Williams Unified School District #2 – WCGF – $2,158,500

ACTION REQUIRED:

Review, Discuss & Recommend Approval

PREVIOUS ACTION:

None

STAFF CONTACT:

Lindsey Jones

RECOMMENDED DISCUSSION TIME:

5 Minutes

ATTACHMENTS:

- Grant Application WC1-060-2023 – Williams Unified School District #2
- Water Conservation Grant Fund Evaluation

STAFF COMMENTS:

None

Williams Athletic Fields Water Conservation Program

Profile : tsiegfried@wusd2.org

Entity Name: : Williams Unified School District #2

I. General Information

1. Title of Project: : Williams Athletic Fields Water Conservation Program

2.Type of Conservation Activity (A.R.S. § 49-1332(B)): : Programs and projects that reduce water use Per A.R.S. 49-1332(B)(2)

Note: for the purpose of the application, the term project and program will be referred to as “conservation activity”

3. Is this for an individual Water Conservation Project or a general Water Conservation Program? : Water Conservation Programm

Please describe the specific components that make it a program. : The Williams Athletic Fields Water Conservation Program is a program because it encompasses multiple locations with multiple deliverables, over a three-year period of time. Arizona Revised Statue 49-1332 of the Water Conservation Grant fund describes (subsection A) the purpose of the monies is to facilitate voluntary water conservation programs that result long-term reductions in water use, including (2) installing drought-resistant landscaping and the removal of natural turf. The program will remove natural turf and resurface with synthetic turf on five athletic fields in the Williams City limits saving more than 11 million gallons of water a year over a minimum of 15 years, for a small community known for being the gateway to the Grand Canyon. Arizona Revised Statue 49-1334 describes the evaluation criteria including showing environmental costs and benefits, the ability to provide multiple benefits, leveraging multiple available funding sources, including federal funding. We believe our program meets all of these criteria and we look forward to hearing from the committee and/or board.

4. What is the location of conservation activity?

City: : Williams

County: : Coconino

Program/Project Congressional District (check all that apply) :

1

Program/Project Legislative District (check all that apply) :

7

Watershed : Bill Williams Mountain Watershed

Active Management Area (if applicable): : NA

Irrigation Non-Expansion area (if applicable): : NA

5.Conservation Activity Cost

Amount requested from the WCGF for this activity: : $2,158,500.00

Amount of matching funds: : $719,500.00

Total conservation activity cost: : $2,878,000.00

When applying for the grant, note that a single water conservation program grant may not exceed $3,000,000. A single water conservation project grant may not exceed $250,000. The WCGF requires at least a twenty-five percent match for each water conservation program or project.

6. What is the estimated water savings in acre-feet per year? : 39

Explain calculation: : 5 (athletic fields) x 7.7 acre ft per year per field (approx. 2.5 million gallons per year per field) = 38.5 acre-feet per year

7. What is the expected duration of the conservation activity? : The process of installing a field is 6-12 weeks. In addition to the installation time, time and resources are needed to acquire quotes, have site visits from vendors, go through the accounts payable process, board approval for agreements, and receiving materials on-site. It is also important to time the installation around Northern Arizona weather and the specific sport seasons using the fields. With all of this in mind, we are looking at the following conservative schedule for the completion of the fields. However, the water conservation activity will last a minimum of 15 years using 15-year guaranteed turf. Below is a conservative estimate of a time frame we believe the district, our potential vendors, our partners, and greater community can accomplish. High School baseball field - conversion from full grass to synthetic turf - Complete project by the end of 2023 Local Softball field - conversion from full grass to synthetic turf - Complete project by the end of 2023 High School football field - conversion from full grass to synthetic turf - Complete project by the end of 2024 Middle School Soccer Pitch (and youth football field) - conversion from full grass to synthetic turf - Complete project by the end of 2025 Elementary practice baseball field - conversion from full grass area to synthetic turf - Complete project by May 2026

II. Conservation Activity Benefits and Results

8. What is the water conservation activity you propose to fund with grant monies? Describe in detail. : The Williams Unified School District will use this grant to convert one football field, two baseball fields (one youth and one high school), one soccer field (pitch), and a softball field, into multi-purpose synthetic turf fields in the City of Williams. All of the fields are currently grass and use an excessive amount of water to maintain (2-2.5 million gallons per year). In partnership with the City of Williams we have been seeking out ways to combat high level use of water. Williams has been in a water shortage for more than a decade. We estimate we can conserve 12 million gallons of water per year for 15 years by replacing the grass fields with synthetic turf. Converting our existing fields to synthetic turf will allow water reserves to increase as well as reducing the overall strain on the groundwater supply and watershed.

9. What is the source of the water that will be conserved? If it is mainstem Colorado River water or Colorado River water delivered through the Central Arizona Project, please clearly indicate so. : The City of Williams Water System is comprised of three wells- the two Dogtown wells and the Rodeo well. A fourth well, Santa Fe produces a minor amount of water for the city. These wells are tapped into the Redwall-Muav (RM) aquifer. The City of Williams 5 surface reservoirs, 3 (functioning) wells, 7 finished water storage tanks, approximately 36 miles of potable water lines, approximately 13 miles of raw water lines, and 5 booster pump stations. Reservoirs o Dogtown o Cataract o Santa Fe o City Dam (Also referred to as Third Dam or Buckskinner) o Kaibab Wells o Dogtown #1 o Dogtown #3 o Rodeo o Santa Fe (low to none producer) o Sweetwater (Not Developed) Tanks o Water Treatment Plant #1 Tank (WT #1) o Water Treatment Plant #2 Tank (WT #2) o 3 rd Street Tank o One Million Gallon Tank (Also referred to as Cinder Hills #1) o Twin Tanks (Also referred to as Cinder Hill #2 and #3) o Taber Tank o Garland Prairie Fire Storage Tank Booster Pump Stations o Cataract Pump Station o Taber Pump Station o One Million Gallon Tank Pump Station (Also referred to as Cinder Hills or Cemetery Pump Station) o Kaibab Lake Booster Pump Station (Inactive)

10. Describe the community (population size, demographics, principal economic activities, etc.) impacted by the conserved water. : The City of Williams is located in Coconino County, Arizona, Latitude 35.25N; Longitude 112.19W. Williams was founded in 1882 and incorporated in 1901. The City's elevation is 6,770' and is in the center of the Kaibab National Forest. Williams encompasses 44 square miles and has an estimated population of approximately 3,300 people. The economy is based primarily upon tourism. The City is collared on the south by an 18,500-acre watershed contributing to five surface reservoirs. The City's water supply is also supported by two major wells and two minor wells with respect to production rate. The Williams Unified School District was established in 1904 in the little town of Williams also known as the "Gateway to the Grand Canyon," Williams was the last town on Historic Route 66 to be bypassed by Interstate 40. The community, bypassed on Oct. 13, 1984, but continues to thrive on tourism. The district intends to use this grant to convert one football field, two baseball fields (one youth and one high school), one soccer pitch, and a softball field, into multi-purpose synthetic turf fields in the City of Williams. These fields support youth sports not only in the Williams Unified School District (population served as of 2016 censes 5,300 - 700 students as of 2022) but for much of the surrounding areas including Williams (population as of 2021 census 3,300), Ashfork (population as of 2020, 824), Valle (population 300), and Parks (population 1400). The High School football field was built in the 1950's, the baseball field in the 1960's, the softball field in the 1990's, the pitch in the 1970's, and the practice baseball field in the 1980's. The City of Williams Recreation Department has the only other fields in Williams, including a small baseball park that is 30 years old. Cureton Park (the city park) provides two small fields one for t-ball and one for minor league Little League teams. Little League Majors and Juniors teams use the high school baseball field. The Little League softball teams, high school teams, and adult softball teams use the high school softball field.

11. What is the extent to which your water conservation activity achieves one or more of the following (select all that apply): :

value1

Describe: : The district will replace five athletic grass fields with artificial turf, conserving 2-2.5 million gallons of water per field per year that equates to 12 million gallons of water a year and nearly 170 million gallons of water over the 15 year minimum life expectancy of the fields. Our overall goal is to provide relief to our communities limited water resources while still providing our community with the athletic fields to support youth sports. In addition to significant water conservation synthetic turf also eliminates the use of potentially harmful pesticides and fertilizers being used on the fields and becoming part of run-off waters. This project is important to the community because we have very limited access to water. Most, if not all of the outlying areas must haul water from water stations.

12. What is the extent to which your water conservation activity addresses one of more of the following: :

Water supply shortages

Groundwater depletion

Describe: : An article in the Williams News in July of 2021 stated that our small water treatment plant had to treat 1.1 million gallons in one day to keep up with the demand over what the wells could produce. Our ground water from the Redwall-Muav (RM) aquifer is 3,500 feet below the surface making it difficult to access water easily and inexpensively. Just 30 minutes East of Williams ground water is available from the C-aquifer at 1,200 feet, in Flagstaff. During years of drought (which have been the past 10 years) the city often locks the districts irrigation boxes to conserve water for residential and commercial use. These conditions significantly reduce the use, maintenance, and life expectancy of our fields. In today's newspaper there is an article concerning the William's City Council decision to implement a building moratorium due to water usage, water treatment (until a new water treatment plant can be built next to the existing one, all ground and watershed water must be treated) and sewer capacity. The town's Vice Mayor Frank McNelly stated that they must stop building anything that will have an impact on our city's water and sewer systems. It is estimated it will be at least 3-4 years before new building permits will be approved. Williams Unified School District is one of the largest users of municipal water in the city. We had already been in council discussions and committee meetings as community partners trying to determine how to start converting our fields that use an exorbitant percentage of our community's water. This grant will allow our community to conserve a significant amount of water and reduce the strain on our town's infrastructure. The water conserved in the program of moving to synthetic turf fields can supply that same water to 89 residential homes every week, per field.

13. How will your water conservation activity align with a local, regional, or statewide water plan or integrated resource management plan? : Williams has coveted water resources from its inception in July 1901. The City of Williams has a Water Master Plan updated in 2018 and Coconino County has a Water Conservation Program as well. Northern Arizona has an arid climate with limited water resources. The depletion of groundwater is an especially critical issue. Of all the resources we use, water is one we truly cannot live without. The City of Williams provides essential municipal services for its residents. Among the services are water supply and wastewater treatment. Originally the City relied solely on surface water. Since surface water supplies were very low in dry years, the City developed a water conservation ordinance, standard operating procedures for hauling water, public education, and a wastewater reuse plan. Also, in 1996 they began a well drilling program. The first deep well was put into service in 2000. The City of Williams is presently experiencing a period of both commercial and residential growth. A combination of infill and new development will increase the water demands on the existing and future system. Anticipated Development for current approved subdivisions, and subdivisions and commercial projects that have been brought before the City for development review and permitting. The City's storage vulnerability is due to the amount of storage capacity of the potable water storage tanks. Currently the tanks have enough capacity to provide water to the City for 2.5 days, during average water use, if the tanks are starting from full. This would not include a fire flow event. The Plan proposes to be able to have storage for a minimum of 3 days considering a fire flow event. Again, the water conserved in the program of moving to synthetic turf fields can supply that same water to 89 residential homes every week. (https://www.recycledh2o.net/2016/05/24/mlb-recycled-water-mia-at-california-stadiums/). This water conservation program will have a great impact to our community. Williams is home insecure here there are more jobs then there are places to live. Our community can't afford a long building moratorium and this program will support our community's efforts to meet the needs of its residents. Converting the majority of our community's fields to synthetic turf will greatly support our State, County, a local water master plans and conservation efforts.

14. What are the costs and benefits of your water conservation activity, including any environmental impacts? : The program will significantly reduce water use and negative environmental impacts. The following is a cost analysis of annual costs after converting our five athletic fields from grass to synthetic turf. (see attached Cost Analysis spreadsheet) There are several benefits to our school district, our youth, our community, and our water resources. The financial burden of maintaining grass fields is significant for such a small rural school district. When outlining the financial differences

between the annual maintenance for grass verses turf was shocking. As this grant has quickly developed we believed there would be a financial benefit in addition to the water conserved and the reduced strain on our community's water/water treatment system. First, our fields are in use on a daily bases for about 40 weeks a year and we still struggle to provide all the needs of our community members. Synthetic turf will allow us to provide high quality athletic youth fields for longer seasons. Second, it takes approximately 62,500 gallons (dimensions and needs of each field varies so we have estimated as close to cost for each field) of water a week to water each field. Currently, we can make our grass fields available for approximately 40 weeks a year (weather permitting). That equates to over 11 million gallons of water saved per year. Over the 15-year life expectancy our water conservation program can boast a savings of more than 165 million gallons of potable water. In addition, we will see significant savings of volunteer hours and FTE maintenance hours. Currently, we have 2 volunteers that spend many hours grooming our fields as well as 2.5 FTE maintaining the five fields. It is estimated we will only need .5 FTE to manage our youth fields and our maintenance expenses will be reduced by more than 90% every year. Field Turf reported that the average cost per hour of use on a grass field is $91.20 and on a synthetic turf field it is $25.74. Next, financially water savings is significant. Each field will have a cost savings of $20,000 or more per year. Turf fields only use water for cleaning specific areas in need of attention so the water needed yearly is nominal. The district spends approximately $254,700 annually to maintain the five grass fields (see the rough break down below). Comparatively, five turf fields will have an annual maintenance of $36,000. This is a staggering annual savings of $218,700. Finally, synthetic turf does not require pesticide or fertilizer. Our community depends heavily on the Bill Williams watershed. The benefit of not needing to add $13,200 worth of poison into our water supply will have a significant financial and environmental effect on our water and wildlife. 5 GRASS FIELDS – Seed $5,000.00 Salaries- 2.5 FTE $108,000.00 Maintenance $15,000.00 Pesticide Contract $12,000.00 Fertilizer $1,200.00 Plumbing $1,500.00 Water for HS Baseball Field (2.5 million gallons a year) $25,000.00 Water for Softball Field (2.2 million gallons a year) $22,000.00 Water for Soccer Pitch (2.5 million gallons a year) $25,000.00 Water for Practice Youth Field (2 million gallons a year) $20,000.00 Water for Football Field (2 million gallons a year) $20,000.00 Total $254,700.00 5 TURF FIELDS - Artificial Turf Replacement X 5 $7,000.00 Salaries- .5 FTE $21,500.00 Maintenance $1,200.00 Water for Football Field $1000.00 Water for HS Baseball Field $1500.00 Water for Softball Field $1200.00 Water for Soccer Pitch $1500.00 Water for Practice Field $1000.00 Total $36,000.00

15. How will you measure the effectiveness of the conservation activity? : We will measure the effectiveness of the program by monitoring time lines, budgets, and water usage compared to the same time periods from the year previous. We will also review water usage from the year prior (2021) as 2022-2023 was an unusually wet winter. We will also collaborate with the water treatment department to determine if we have a reduction in waste water, as well. In addition to water conservation we will monitor the dollars saved from the reduction in water use as well as the reduction in field maintenance. Lastly, we will track the success of including our students in the process of undertaking a large water conservation project. If we can acquire the data we will also track how much of an effect educating our students on water conservation has on behaviors at their individual homes.

III. Funding Sources

16. If your water conservation activity is eligible for funding from WIFA's Long-Term Water Augmentation Fund or Water Supply Development Fund, does the nature of your conservation activity make funding from those funds impractical, and why? : Williams Unified School District is a K-12 educational institution, therefore we are not eligible of funding from either of the following funding sources. The Long-Term Water Augmentation Fund (LTWAF) was created to finance water supply development projects that would increase water supplies for the state of Arizona. To be eligible for Water Supply Development Fund (WSDF), your entity must be a water provider with an eligible project.

17. Would the conservation activity be otherwise implemented without this grant funding? Explain. : The district has been in talks with the city about resurfacing our practice field so it can be used by more organizations. It has been a yearlong conversation going back and forth. The short answer is no, at least not in the near future. While the city is desperate to support us in reducing our water consumption they are burdened with funding a new

water treatment plant to treat our current water supply system and our sewer system. We do not foresee them being able to contribute financially in a significant way in the near future. However, we are reaching out to our other community partners asking for assistance as well as researching other funding opportunities. At the end of the day our school district has a nominal tax basis and our annual budget is small compared to most schools in Arizona. This grant will allow us to leverage the funds we do have to conserve the most water while also meeting the needs of our community in a significant way.

18. To what extent will your water conservation activity maximize or leverage multiple available funding sources, including federal funding? : We will be using our federally funded Unrestricted Capital Outlay (UCO) 610 account to fund the portions of the program not covered by the grant. We currently have $100,000 available for fiscal year 2023. We are budgeting the balance of the cash matching funds across fiscal years 2024, 2025 and 2026. In addition to federal funding we will also be using the Arizona Tax Credit monies identified by sport to also supplement the program, approved by our site council. We will be reaching out to parents and our booster clubs to do fundraisers and encourage more people to invest in our athletic programs through donations and Tax Credit.

19. Are there cost-sharing opportunities with other applicants or other parties? Explain. : We will be reaching out to parents and our booster clubs to do fundraisers and encourage more people to invest in our athletic programs through donations and Tax Credit. The district also intends to write additional grants to support our Best Practices for water conservation and to support our community members. We are also reaching out to our current community partners for support of this program (City of Williams, City of Williams Recreation, Organization Region #257, Williams Little League, Arizona Youth Soccer Williams Youth Football & Cheer, Fellowship of Christian Athletes, and the Flagstaff Ultimate Club. All of these existing partners utilize the fields for their activities.

20. What is the source and amount of the match (including in-kind match)? : The total amount for the Williams Athletic Fields Water Conservation Program is $2,878,000. 25% of the total is $719,500, the district will budget the match over the three fiscal years with a completion date of no later than June 1st, 2026. Salaries - $258,000 Maintenance & Operation (M&O) Capital Expenses $319,500 Unrestricted Capital Outlay (UCO) In-Kind $142,000 Volunteer hours, District administrative costs, and Prepping Equipment (Cost Share, Community Partnerships)

IV. Capacity, Feasibility, & Public Comment

21. What qualifications and capacity do you have for completing your proposed water conservation activity? Include any past managerial deficiencies and provide the name(s) and qualifications of the individual(s) or entities who will be managing this activity. : The Williams Unified School District has undertaken many large federally and state funded projects over its 119 years of existence. WUSD has existing accounting and personnel policies and procedures (P&P) that include the necessary controls to meet federal and state funding requirements.Our administrators, school board, athletic director, coaches, parents, and community is in full support of the program. The district will do its due diligence in selecting the best contractor for the synthetic turf. We have already been collecting recommendations from other Northern Arizona districts. Eric Evans – Superintendent Brianne Ford – Business Manager Joe Howe – Maintenance Director Board President – John Romero

22. Will there be significant management impacts as the result of the proposed conservation activity, or any technology associated with the conservation activity? (For example: additional costs or staffing requirements) : For a program of this size we will hire a qualified Program manager for the 3 years of the grant to ensure all timelines are on schedule, contractors are meeting program goals, stakeholders are kept abreast of the progress of the program, district employees are available for the program when necessary, monitoring the program budgets, spearheading collaborations with community members, providing monthly board reports on the program, and ensuring any and all reporting deadlines are met.

23. Will the proposed conservation activity promote collaborative partnerships to address water-related issues? Explain. : The Williams Athletic Fields Water Conservation Program will promote more involvement from existing partnerships as well as having the potential of attracting new partners. Our partners are all local and struggle with water insecurities personally and professionally just as we do. One of the programs partnership goals is to encourage conversations and collaborations surrounding other public areas in the community where we can replace natural grass with turf to further reduce potable water use on landscaping. The second partnership goal is working with the City of Williams and other partners to write grants and fundraise to fund new projects and programs to further promote water conservation.

24. What is the stakeholder involvement in the conservation activity planning process? : STAKEHOLDERS: School board- Approved entering into conversations with the City of Williams about cost sharing for synthetic turf fields and applying for this grant opportunity City of Williams-Agenda item to discuss financial support for water conservation efforts in the form of synthetic athletic fields Student Athletes- Ongoing discussions and education concerning field resurfacing options Coaches- Ongoing discussions with administration about the need for revitalize our fields that are 50-70 years old. Parents- invitations to parents to be a part of planning committee for the individual sites City Rec Center- Ongoing discussions concerning the impact to scheduling on synthetic fields. With turf the fields will be available more often to community members Williams Youth Football & Cheer- Invited to join planning committees Fellowship of Christian Athletes- Invited to join planning committees Flagstaff Ultimate Club- Invited to join planning committees Williams Little League- Invited to join planning committees Arizona Youth Soccer Organization- Invited to join planning committees

25. Will the proposed conservation activity include public outreach and opportunities for the public to learn about the conservation activity? Explain. : The district believes as an educational institution we should be leading the way in water conservation. Our high school science department offers environment science as a class to help our young people understand the importance of water conservation in hopes they will take home their new knowledge and we can compound the water savings. These fields will give our students tangible access to real water conservation. Our hope is to have our advanced math classes and science classes participate in collecting and monitoring our water conservation efforts. In addition to our students benefiting from our efforts, our program manager will work closely with educators and the City of Williams to involve community members in the program but also to encourage them to apply water conservation principles to their own life style choices.

26. Is there community and/or sector support for the conservation activity? Explain. : The City of Williams is the gateway to the Grand Canyon and was the last stretch of Route 66 to be overtaken by the I-40. Williams High School has been in existence for nearly 120 years (est. 1904). The plaque on the gymnasium says it was built in 1953 along with our football field. The president of the school board at the time was a gentleman named Jack Dent, his son and grandson both attended Williams High School, and his great grand son and daughter are both current student athletes at the high school. Williams has a long history of generations of family member alumni. Why give this detail here? Because support for our water conservation program isn't an issue, we have buy-in from our community, we have been building it student by student for 120 years. Unfortunately, we have a small tax basis in a small community everyone loves to visit. With the financial support this grant will provide we could create a snowball effect of other water conservations projects and programs springing up throughout the area. We have an active boaster club, community organizations that provided $100,000 in academic scholarships to our high school seniors every year. Williams generally has the largest fan following home and away. We have support from our community partners and leadership. This program will spotlight the importance for all of us to take water conservation personally as well as demonstrating direct benefits of protecting our local water system by reducing use wherever possible.

27. How feasible is it to complete your water conservation activity? Explain. : We have the ability to have the fields surveyed and quotes obtained from contractors. We have reached out to other districts in Northern Arizona (Bradshaw Mountain High School and Flagstaff High School) to get recommendations for contractors to reach out to and to get verbal financial and time estimates for this grant proposal. Our initial study gives us confidence

that we can complete this program prior to the end of fiscal year 2026.

28. If the conservation activity is a continuation of ongoing activities, has the activity been shown to be effective? If a new activity, has the proposed project, technology, or technique previously been implemented? : The Williams Athletic Fields Water Conservation Program is a new activity for our community but has been used all over Arizona. School, municipalities, sports complexes, MLB teams, and other organizations have seen great success in water conservation efforts with each grass field replaced with turf. One of the greatest down sides to turf fields is how hot they get in the summer, turf can be 20-30 degrees hotter than grass. Fortunately for Williams, we have significantly cooler summers here in the mountains. Arizona High Schools with turf fields as of August 2019 (AZCentral article by Richard Obert called Turf vs. grass: Arizona's list of synthetic football fields at high schools on the rise): American Leadership Academy Gilbert North American Leadership Academy Queen Creek Buckeye Buckeye Youngker Chinle Cottonwood Mingus Fort Defiance Window Rock Ganado Gilbert Campo Verde Gilbert Christian Gilbert Higley Gilbert Williams Field Goodyear Estrella Foothills Kayenta Monument Valley Marana Maricopa Flagstaff Coconino Paradise Valley Phoenix Arcadia Phoenix North Canyon Phoenix Northwest Christian Phoenix Shadow Mountain Prescott Prescott Valley Bradshaw Mountain Sahuarita Scottsdale Chaparral Scottsdale Christian Academy Scottsdale Coronado Scottsdale Notre Dame Prep Scottsdale Saguaro Sedona Red Rock Tonopah Valley Tucson Tucson Salpointe Catholic Vail Cienega West Point Winslow Clark County Unified School District started converting athletic fields to synthetic turf in 2020 to fight the drought crisis plaguing Southern Nevada. At article published by KTNV in April of 2023 titled 2-million gallons of water saved for each grass field converted to turf shows the successes schools and communities are experiencing with low/no water surface alternatives. CCUSD was awarded a grant from the Bureau of Reclamation for part of their very large resurfacing project. https://youtu.be/G9K5NDq_F50

29. Will the proposed conservation activity implement an established Best Management Practice? Explain. : Yes, the program of removing natural grass and replacing it with synthetic turf will implement an established Best Management Practice for local athletic fields. The term 'Best Management Practices', or BMPs, was coined nearly 35 years ago as a way to describe acceptable practices that could be implemented to protect water quality and promote soil conservation during forestry activities. A BMP can be a structural "thing" that you actually install on-the-ground according to the Environment Protection Agency. The City of Williams is nestled at the foot of the Bill Williams Mountain. Seasonal run-off is used as our town’s main water source along with a few very deep wells. Water scarcity is a real thing here. The City of Williams, the community, our athletic director, superintendent, and school board are looking at ways the district can curb its water use of field maintenance. As one of the largest users of potable water in Williams, the district and our local partners are committed to implementing an established best practice for conserving water with alternative surface material. This grant will allow us to start with these five. Once the City of Williams has overcome our Water Treatment Emergency that has caused a building moratorium we will also partner with them to work towards getting our local park and two other fields resurfaced for additional water conservation.

Additional Supporting Documentation (pdf, jpg, word, excel) : WUSD2 - WCGF Budget.xlsx

Additional Supporting Documentation (pdf, jpg, word, excel) : Annual Expenditure Budget 2023.xls

Additional Supporting Documentation (pdf, jpg, word, excel) : Cost analysis.xlsx

Additional Supporting Documentation (pdf, jpg, word, excel) : Partner Agreements.pdf

Additional Supporting Documentation (pdf, jpg, word, excel) : Current News Article.pdf

Average Score :

# of Reviews : 0

# of Denials : 0

Please use the following link to view the Budget

Budget Worksheet :

View Budget Worksheet : https://portal.ecivis.com/#/peerBudget/481CED22-FAE2-4EBB-8843-7699F3DEBA06

Application Goals :

View Application Goals : https://portal.ecivis.com/#/peerGoals/8CCF8CDA-44B8-4717-9416-EF395AFB1186

Created by : zengine+36768@srm.ecivis.com

Record ID # : 50703470

Last change : 2023-05-19T07:07:58+0000

Budget Table

Grant Award Budget For:

FY 2023 Water Conservation Grant Fund (WCGF)

WATER INFRASTRUCTURE FINANCE AUTHORITY OF ARIZONA

Project Name:

Budget Items

Category	Title	Units	Unit Cost	Extended Cost	Direct Cost	Indirect Cost	Cost Share
Personnel							
	Program Supervisor 3 years	3	$50,000.00	$150,000.00	$0.00	$0.00	$0.00
	Ground Maintenance hours for prepping fields for contractors to lay artifical turf over 3 years	3	$36,000.00	$108,000.00	$0.00	$0.00	$0.00
Personnel Total		**0**	**$86,000.00**	**$258,000.00**	**$0.00**	**$0.00**	**$0.00**
Fringe Benefits							
	Fringe Benefits	0	$0.00	$0.00	$0.00	$0.00	$0.00
Fringe Benefits Total		**0**	**$0.00**	**$0.00**	**$0.00**	**$0.00**	**$0.00**
Travel							
	Travel	0	$0.00	$0.00	$0.00	$0.00	$0.00
Travel Total		**0**	**$0.00**	**$0.00**	**$0.00**	**$0.00**	**$0.00**
Equipment							
	Turf Maintenance Equipment	5	$3,000.00	$15,000.00	$0.00	$0.00	$0.00
Equipment Total		**0**	**$68,000.00**	**$15,000.00**	**$0.00**	**$0.00**	**$0.00**
Supplies							
	Initial Turf Supplies	5	$5,000.00	$25,000.00	$0.00	$0.00	$0.00
Supplies Total		**0**	**$5,000.00**	**$25,000.00**	**$0.00**	**$0.00**	**$0.00**
Contractual							
	High School Baseball field	1	$600,000.00	$600,000.00	$0.00	$0.00	$0.00
	High School Softball field	1	$500,000.00	$500,000.00	$0.00	$0.00	$0.00
	Middle School Soccer field	1	$400,000.00	$400,000.00	$0.00	$0.00	$0.00
	High School Football field	1	$500,000.00	$500,000.00	$0.00	$0.00	$0.00

Budget Table

	Youth baseball field	1	$375,000.00	$375,000.00	$0.00	$0.00	$0.00
Contractual Total		**0**	**$2,375,000.00**	**$2,375,000.00**	**$0.00**	**$0.00**	**$0.00**
Construction							
	Prepping of ground for all 5 fields	5	$8,000.00	$40,000.00	$0.00	$0.00	$0.00
Construction Total		**0**	**$8,000.00**	**$40,000.00**	**$0.00**	**$0.00**	**$0.00**
Indirect Costs							
	Indirect Cost	0		$0.00	$0.00	$0.00	$0.00
Indirect Costs Total		**0**	**$0.00**	**$0.00**	**$0.00**	**$0.00**	**$0.00**
Other							
	Ground prepping equipment	1	$65,000.00	$65,000.00	$0.00	$0.00	$0.00
	In-Kind administrative expenses	5	$10,000.00	$50,000.00	$0.00	$0.00	$0.00
	In-Kind staffing hours	5	$10,000.00	$50,000.00	$0.00	$0.00	$0.00
Other Total		**0**	**$10,000.00**	**$165,000.00**	**$0.00**	**$0.00**	**$0.00**
			$2,552,000.00	$2,878,000.00			

COST ANALYSIS - PARETO

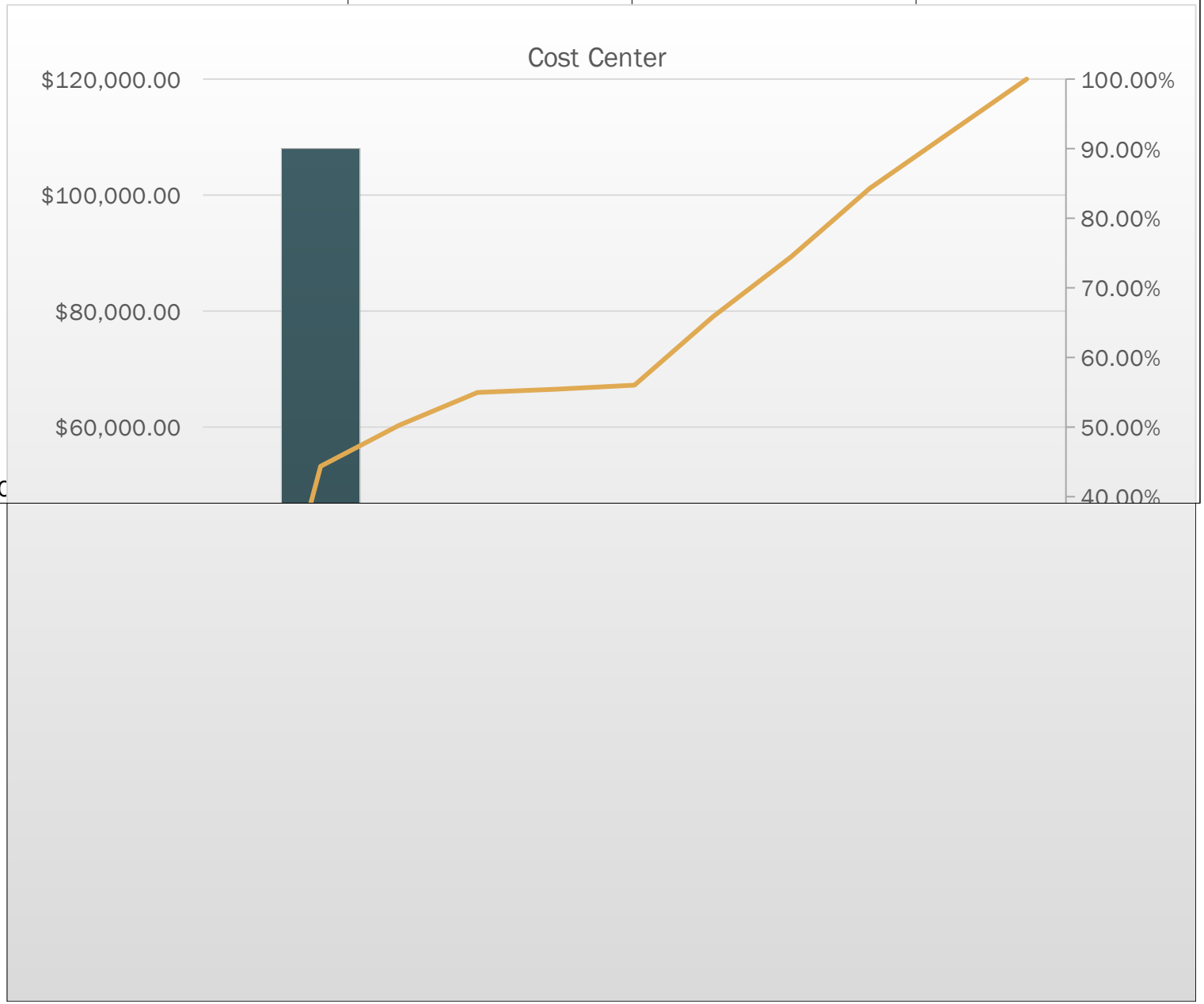

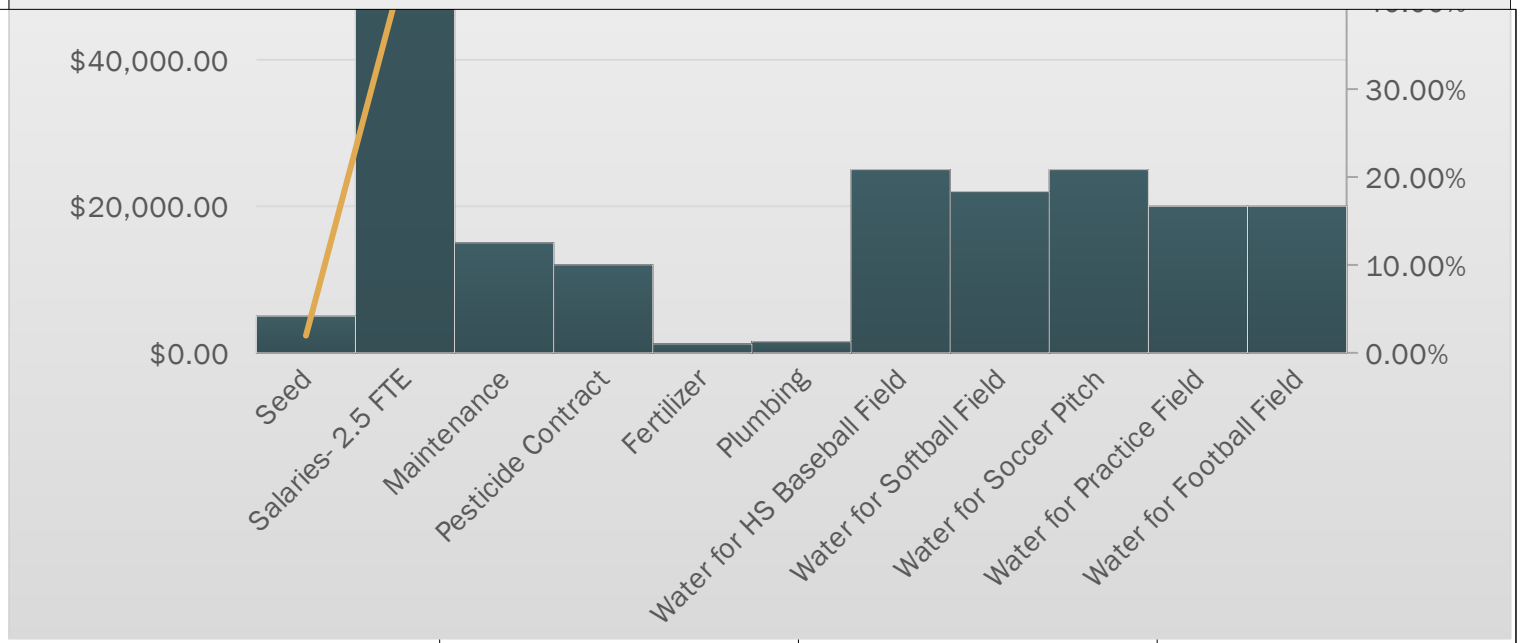

COST ANALYSIS

Cost Center	Annual Cost	Percent of Total	Cumulative Percent
Seed	$5,000.00	1.96%	1.96%
Salaries- 2.5 FTE	$108,000.00	42.40%	44.37%
Maintenance	$15,000.00	5.89%	50.26%
Pesticide Contract	$12,000.00	4.71%	54.97%
Fertilizer	$1,200.00	0.47%	55.44%

Natural Grass

	Cost Center	Annual Cost	Percent of Total	Cumulative Percent
	Plumbing	$1,500.00	0.59%	56.03%
	Water for HS Baseball Field	$25,000.00	9.82%	65.84%
	Water for Softball Field	$22,000.00	8.64%	74.48%
	Water for Soccer Pitch	$25,000.00	9.82%	84.30%
	Water for Practice Field	$20,000.00	7.85%	92.15%
	Water for Football Field	$20,000.00	7.85%	100.00%
	Total	$254,700.00	100.00%	

COST ANALYSIS - PARETO

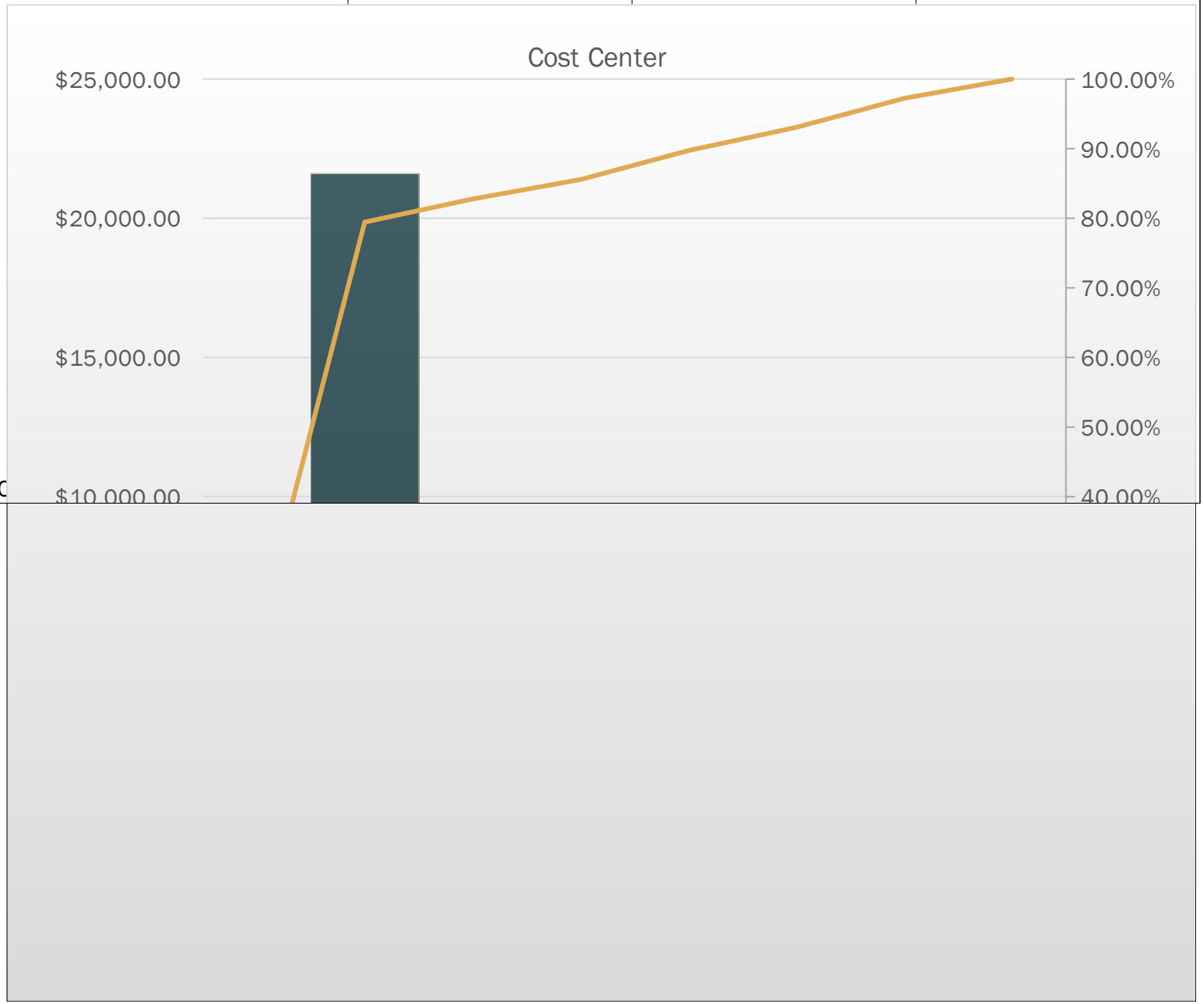

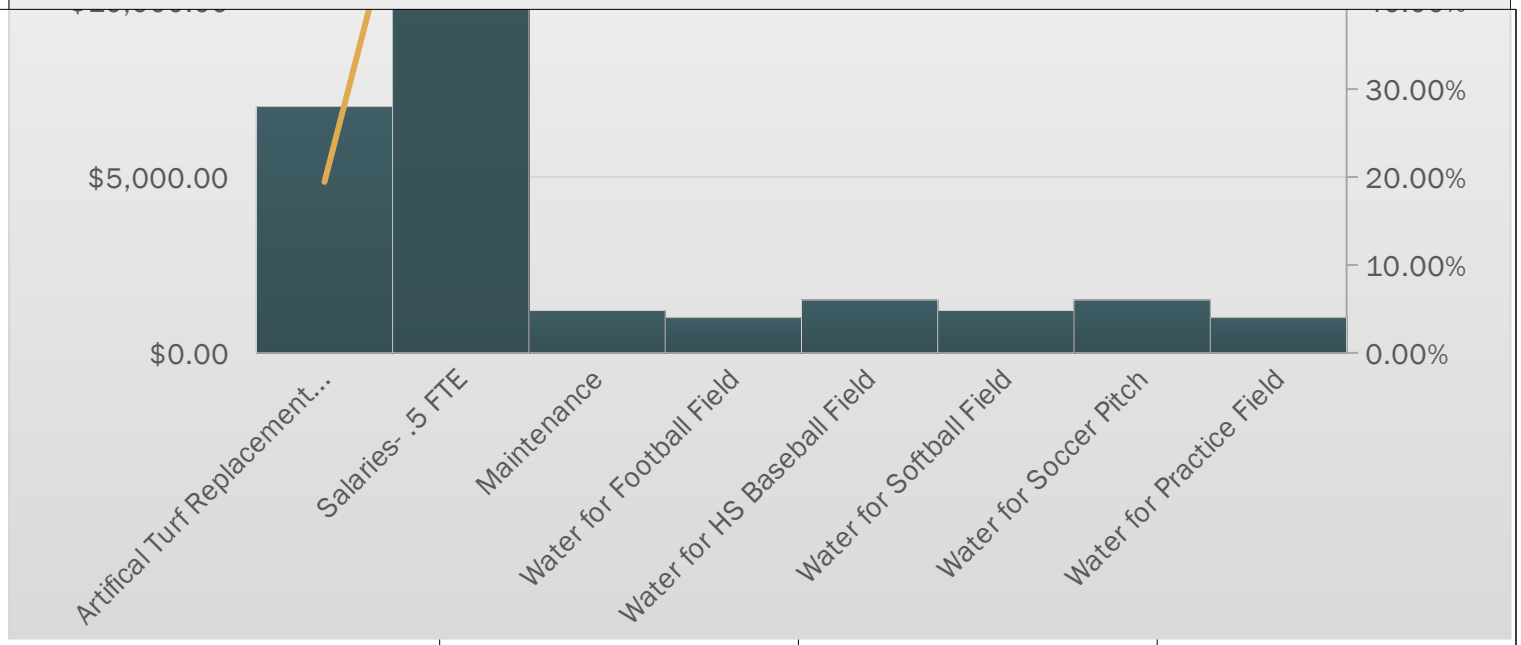

COST ANALYSIS - 5 Athletic Fields

Cost Center	Annual Cost	Percent of Total	Cumulative Percent
Artifical Turf Replacement X 5	$7,000.00	19.44%	19.44%
Salaries- .5 FTE	$21,600.00	60.00%	79.44%
Maintenance	$1,200.00	3.33%	82.78%
Water for Football Field	$1,000.00	2.78%	85.56%
Water for HS Baseball Field	$1,500.00	4.17%	89.72%

	Cost Center	Annual Cost	Percent of Total	Cumulative Percent
	Water for Softball Field	$1,200.00	3.33%	93.06%
	Water for Soccer Pitch	$1,500.00	4.17%	97.22%
	Water for Practice Field	$1,000.00	2.78%	100.00%
	Total	$36,000.00	100.00%	

KF-EB

WILLIAMS UNIFIED SCHOOL DISTRICT #2
PO BOX 427
WILLIAMS, AZ 86046

REQUEST FOR USE OF SCHOOL FACILITIES

Date 7/12/, 20 22

TO: ERIC EVANS, SUPERINTENDENT, WILLIAMS USD #2

We, Williams Youth Football & Cheer, request the use of a school building facility at
Name of organization/group

Williams High School for the purpose of presenting the following program:
Football / Cheer Practice and games

Specific location(s) requested Baseball left field (Football Practice field
Outfield softball field grass, (High school field - Saturdays)
Indoor location for inclement weather for cheer leaders Wus High Sch or Middle Sch

We wish the above facility on the following dates: (An attachment is acceptable)

Monday - Friday Evenings July 25 - Nov 12
Day(s) of week Month Date(s) Year Hours

(Aug 27 for 6 games) *schedule of games will be provided ASAP

If equipment, lighting, tables, or chairs are required, please specify and indicate any special arrangements needed on the form provided. - Concession stands, restrooms, [illegible] (quip & box, score board, field chains marke etc.

sibly ed stadium lights.

There **will**___, **will not** X be an admission charge.

The admission will be _____ for adults and _____ for children. The proceeds will be used for _____

The rental fee will include custodial or school personnel services, utility costs, and equipment usage fees, if applicable. *NOTE: Food services charges and technicians are paid separately.*

we will work with youth football on field availability, our programs will have priority, inside locations a little difficult to arrange. AE

Two (2) people the District may contact, if necessary, are:

Name: Charlene Reidhead Address/City/Zip Code: 2354 E New Moon Way Williams

Signature: Charlene Reidhead

Phone (work): 928-241-0587 (home/mobile): _____

Name: Roya Reidhead Address/City/Zip Code: same as above

Signature: _____

KF-EB

WILLIAMS UNIFIED SCHOOL DISTRICT #2
PO BOX 427
WILLIAMS, AZ 86046

REQUEST FOR USE OF SCHOOL FACILITIES

Date April 11th, 20 23

TO: ERIC EVANS, SUPERINTENDENT, WILLIAMS USD #2

We, Fellowship of Christian Athletes, request the use of a school building facility at
Name of organization/group

Williams High School for the purpose of presenting the following program:

Baseball fields

Specific location(s) requested Baseball fields

We wish the above facility on the following dates: (An attachment is acceptable)

Sat, sun, mon	July	1st, 2nd, 3rd	2023	8:30-12 2-4
Day(s) of week	Month	Date(s)	Year	Hours

equipment, lighting, tables, or chairs are required, please specify and indicate any special arrangements needed on the form provided.

There **will** ☐, **will not** ☑ be an admission charge.

The admission will be $0 for adults and $0 for children. The proceeds will be used for N/A

The rental fee will include custodial or school personnel services, utility costs, and equipment usage fees, if applicable. *NOTE: Food services charges and technicians are paid separately.*

Two (2) people the District may contact, if necessary, are:

Name: Katie Yoder Address/City/Zip Code: 1 N 1st St Phx, AZ 85004

Signature: Katie Yoder

Phone (work): 6235706209 (home/mobile):

Name: Aaron Hgginbotham Address/City/Zip Code: 1 N 1st St Phx AZ 85004

gnature: Aaron Higginbotham

Phone (work): 6025764093 (home/mobile):

KF-EB

WILLIAMS UNIFIED SCHOOL DISTRICT #2
PO BOX 427
WILLIAMS, AZ 86046

REQUEST FOR USE OF SCHOOL FACILITIES

Date June 15, 20 22

TO: ERIC EVANS, SUPERINTENDENT, WILLIAMS USD #2

We, [illegible], request the use of a school building facility at
Name of organization/group

[illegible] for the purpose of presenting the following program:
Club [illegible]

Specific location(s) requested [illegible]

We wish the above facility on the following dates: (An attachment is acceptable)

Day(s) of week	Month	Date(s)	Year	Hours
Sat Sun	June	18/19	2022	1-4 [illegible]

If equipment, lighting, tables, or chairs are required, please specify and indicate any special arrangements needed on the form provided.

There **will** ☐, **will not** ☒ be an admission charge.

The admission will be _____ for adults and _____ for children. The proceeds will be used for _____

The rental fee will include custodial or school personnel services, utility costs, and equipment usage fees, if applicable. *NOTE: Food services charges and technicians are paid separately.*

Two (2) people the District may contact, if necessary, are:

Name: [illegible] Address/City/Zip Code: [illegible]

Signature: [illegible]

Phone (work): [illegible] (home/mobile): 952 210 7565

Name: Joseph Hoegerich Address/City/Zip Code: 11961 E Old Rt 66, Parks AZ 86015

Signature: [illegible]

Phone (work): _____ (home/mobile): 913-526-3229

KF-EB

WILLIAMS UNIFIED SCHOOL DISTRICT #2
PO BOX 427
WILLIAMS, AZ 86046

REQUEST FOR USE OF SCHOOL FACILITIES

Date 11/21, 20 22

TO: ERIC EVANS, SUPERINTENDENT, WILLIAMS USD #2

We, City of Williams Recreation, request the use of a school building facility at
Name of organization/group

WEMS and WHS Gym for the purpose of presenting the following program:

Adult Basketball open gym and Family open gym

Specific location(s) requested GYM and restrooms

We wish the above facility on the following dates: (An attachment is acceptable)

wed and Thursda	Nov-Aug		2022-2023	Wed- 730-9
Day(s) of week	Month	Date(s)	Year	Hours

.. equipment, lighting, tables, or chairs are required, please specify and indicate any special arrangements needed on the form provided.

There **will** ☐, **will not** ☑ be an admission charge.

The admission will be _____ for adults and _____ for children. The proceeds will be used for_____

The rental fee will include custodial or school personnel services, utility costs, and equipment usage fees, if applicable. *NOTE: Food services charges and technicians are paid separately.*

Two (2) people the District may contact, if necessary, are:

Name: Sylvia Lopez Address/City/Zip Code: _____

Signature: Sylvia Lopez

Phone (work): 9286351496 (home/mobile): _____

Name: _____ Address/City/Zip Code: _____

.gnature: _____

Phone (work): _____ (home/mobile): _____

WEMS

Insurance on file Exp. new one sent.

KF-EB

WILLIAMS UNIFIED SCHOOL DISTRICT #2
PO BOX 427
WILLIAMS, AZ 86046

REQUEST FOR USE OF SCHOOL FACILITIES

Date 9/14, 20 22

TO: ERIC EVANS, SUPERINTENDENT, WILLIAMS USD #2

We, City of Williams, request the use of a school building facility at
Name of organization/group

WEMS Gym for the purpose of presenting the following program:

Family Open Gym to k-8th grade and their families

Specific location(s) requested WEMS GYM

We wish the above facility on the following dates: (An attachment is acceptable)

Starting September 29th and All Thursdays unless there is an event. 6:30pm-9pm

Day(s) of week Month Date(s) Year Hours

During sports if we could still be at 630pm 2022-2023

If equipment, lighting, tables, or chairs are required, please specify and indicate any special arrangements needed on the form provided.

need access to bathrooms also.

There **will**___, **will not** X be an admission charge.

The admission will be _____ for adults and _____ for children. The proceeds will be used for_____

The rental fee will include custodial or school personnel services, utility costs, and equipment usage fees, if applicable. *NOTE: Food services charges and technicians are paid separately.*

Two (2) people the District may contact, if necessary, are:

Name: Sylvia Lopez Address/City/Zip Code: 113 S. 1st st Williams AZ 86046

Signature: Sylvia Lopez

Phone (work): 928.635.1496 (home/mobile): _____

Name: Tim Pettit Address/City/Zip Code: 113 S.1st St Williams AZ 86046

Signature: _____

Phone (work): 928.635.4451 EXT 201 (home/mobile): _____

KF-EB

WILLIAMS UNIFIED SCHOOL DISTRICT #2
PO BOX 427
WILLIAMS, AZ 86046

REQUEST FOR USE OF SCHOOL FACILITIES

Date 2/21, 20 23

TO: ERIC EVANS, SUPERINTENDENT, WILLIAMS USD #2

We, williams little league, request the use of a school building facility at
Name of organization/group

WEMS & WHS for the purpose of presenting the following program:

Little league - skills assessment, practices

Specific location(s) requested WEMS gym & available field, WHS baseball & softball fields

We wish the above facility on the following dates: (An attachment is acceptable)

TBD march - July 2023

Day(s) of week Month Date(s) Year Hours

If equipment, lighting, tables, or chairs are required, please specify and indicate any special arrangements needed on the form provided.

There **will** [ ], **will not** [X] be an admission charge.

The admission will be _____ for adults and _____ for children. The proceeds will be used for_____

The rental fee will include custodial or school personnel services, utility costs, and equipment usage fees, if applicable. *NOTE: Food services charges and technicians are paid separately.*

Two (2) people the District may contact, if necessary, are:

Name: Erhard Gonzalez Address/City/Zip Code: _____

Signature: _____

Phone (work): _____ (home/mobile): 858 736 4252

Name: Lourdes Maya Address/City/Zip Code: _____

Signature: _____

Phone (work): _____ (home/mobile): 602 577 1769

KF-EB

WILLIAMS UNIFIED SCHOOL DISTRICT #2
PO BOX 427
WILLIAMS, AZ 86046

REQUEST FOR USE OF SCHOOL FACILITIES

Date 2/9, 20 23

TO: ERIC EVANS, SUPERINTENDENT, WILLIAMS USD #2

We, Susan Daly + AYSO Region #257, request the use of a school building facility at
Name of organization/group

Williams Elementary MS Field for the purpose of presenting the following program:
AYSO Summer Soccer.

Specific location(s) requested Middle School FIELD -

We wish the above facility on the following dates: (An attachment is acceptable) End of season might be end of August.

Day(s) of week	Month	Date(s)	Year	Hours
Saturdays	June -	September	2023	
Some weekdays	May-	September	2023	-occasional evenings

If equipment, lighting, tables, or chairs are required, please specify and indicate any special arrangements needed on the form provided.

There **will**___, **will not** X be an admission charge.

The admission will be Ø for adults and Ø for children. The proceeds will be used for N/A

The rental fee will include custodial or school personnel services, utility costs, and equipment usage fees, if applicable. *NOTE: Food services charges and technicians are paid separately.*

Two (2) people the District may contact, if necessary, are:

Name: Susan Daly Address/City/Zip Code: PO BOX 13, WILLIAMS, AZ 86046

Signature: Susan D. Daly

Phone (work): 928 635 4461 (home/mobile): 602 538 7105

Name: Kelsey Skinner Address/City/Zip Code: PO BOX 966 86046

Signature: Kelsey Skinner

Phone (work): WEMS (home/mobile): 360 333 5134

Subscribe Now

Williams-Grand Canyon News
GATEWAY TO THE GRAND CANYON

Grand Canyon News
EXPERIENCE THE SCENIC WONDER

Trusted local news leader for Williams AZ and the Grand Canyon

View Your Credit Score

Find Out How Much House You Can Afford. Get Pre-Approved Today!

Veterans: $0 Down VA Home Loan

The demand for water: Is the solution more wells or decreased use in Williams?

Kaibab Lake is one of five surface reservoirs that supplement the city of Williams water supply. (Photo/Kaibab National Forest)

By Wendy Howell

Originally Published: July 6, 2021 11:42 a.m.

Tweet

WILLIAMS, Ariz. — Pull out any archived edition of the *Williams News* from the past 120 years and there will be a story about water. However, the problem isn't necessarily a lack of water, it's how to get to the water.

Water woes have plagued the city since its inception, and it continues today.

The Williams City Council was recently advised that demand for water this year is up 30 percent over normal.

"We actually treated 1.1 million gallons one day in June, which I've never seen us have to treat that much water," said Pat Carpenter, water and wastewater consultant for Williams.

Super Simple Tuna Cakes & Tartar Sauce

Carpenter said because of the increase in water demand, the outcome is the waste water treatment plant is also operating at high levels.

"So everything is trending up, and with everything going on around town, it's just busy," Carpenter told the council.

The city obtains water primarily from three wells — the two Dogtown wells and the Rodeo well. A fourth well, Santa Fe, produces a minor amount of water for the city. The

city supplements the wells with water from Dogtown Reservoir, City Reservoir, Santa Fe Reservoir, Cataract Lake and Kaibab Lake.

Elephant Rocks Golf Course opens all 18 holes; all are invited to come play

POSTED 6 HOURS AGO

00:10 / 00:10

Read More

In 2015, the city completed drilling of the Sweetwater Well in response to the failure of one of the Dogtown wells that coincided with low reservoir water. That left the city with just a seven-month supply of water and resulted in water restrictions for residents and a moratorium on new building.

The city spent $4.5 million drilling the Sweetwater Well and nearly $2 million to resuscitate the Dogtown 1 well.

Now the city is considering whether it's time to put the Sweetwater Well into production. The well is encased in concrete, but would need to be cleared and tested. Installation of a pump, testing for arsenic, and connections to the city water system are still needed to complete the project.

"This has been on my radar for a while," Carpenter said. "But when you are dealing with wells of that nature, it's not inexpensive."

KF-EB

WILLIAMS UNIFIED SCHOOL DISTRICT #2
PO BOX 427
WILLIAMS, AZ 86046

REQUEST FOR USE OF SCHOOL FACILITIES

Date 7/12/, 20 22

TO: ERIC EVANS, SUPERINTENDENT, WILLIAMS USD #2

We, Williams Youth Football & Cheer, request the use of a school building facility at
Name of organization/group

Williams High School for the purpose of presenting the following program:
Football / Cheer Practice and games

Specific location(s) requested Baseball left field (Football Practice field
Outfield softball field grass, (High school field - Saturdays)
Indoor location for inclement weather for cheer leaders Wus High Sch or Middle Sch

We wish the above facility on the following dates: (An attachment is acceptable)

Monday - Friday Evenings July 25 - Nov 12
Day(s) of week Month Date(s) Year Hours

(Aug 27 for 6 games) *schedule of games will be provided ASAP

If equipment, lighting, tables, or chairs are required, please specify and indicate any special arrangements needed on the form provided. - Concession stands, restrooms, [illegible] (quip & box, score board, field chains marke etc.

sibly ed stadium lights.

There **will**___, **will not** X be an admission charge.

The admission will be _____ for adults and _____ for children. The proceeds will be used for _____

The rental fee will include custodial or school personnel services, utility costs, and equipment usage fees, if applicable. *NOTE: Food services charges and technicians are paid separately.*

we will work with youth football on field availability, our programs will have priority, inside locations a little difficult to arrange. AE

Two (2) people the District may contact, if necessary, are:

Name: Charlene Reidhead Address/City/Zip Code: 2354 E New Moon Way Williams

Signature: Charlene Reidhead

Phone (work): 928-241-0587 (home/mobile): _____

Name: Roya Reidhead Address/City/Zip Code: same as above

Signature: _____

KF-EB

WILLIAMS UNIFIED SCHOOL DISTRICT #2
PO BOX 427
WILLIAMS, AZ 86046

REQUEST FOR USE OF SCHOOL FACILITIES

Date April 11th, 20 23

TO: ERIC EVANS, SUPERINTENDENT, WILLIAMS USD #2

We, Fellowship of Christian Athletes, request the use of a school building facility at
Name of organization/group

Williams High School for the purpose of presenting the following program:

Baseball fields

Specific location(s) requested Baseball fields

We wish the above facility on the following dates: (An attachment is acceptable)

Sat, sun, mon	July	1st, 2nd, 3rd	2023	8:30-12 2-4
Day(s) of week	Month	Date(s)	Year	Hours

equipment, lighting, tables, or chairs are required, please specify and indicate any special arrangements needed on the form provided.

There **will** ☐, **will not** ☑ be an admission charge.

The admission will be $0 for adults and $0 for children. The proceeds will be used for N/A

The rental fee will include custodial or school personnel services, utility costs, and equipment usage fees, if applicable. *NOTE: Food services charges and technicians are paid separately.*

Two (2) people the District may contact, if necessary, are:

Name: Katie Yoder Address/City/Zip Code: 1 N 1st St Phx, AZ 85004

Signature: Katie Yoder

Phone (work): 6235706209 (home/mobile):

Name: Aaron Hgginbotham Address/City/Zip Code: 1 N 1st St Phx AZ 85004

gnature: Aaron Higginbotham

Phone (work): 6025764093 (home/mobile):

KF-EB

WILLIAMS UNIFIED SCHOOL DISTRICT #2
PO BOX 427
WILLIAMS, AZ 86046

REQUEST FOR USE OF SCHOOL FACILITIES

Date June 15, 20 22

TO: ERIC EVANS, SUPERINTENDENT, WILLIAMS USD #2

We, [illegible], request the use of a school building facility at
Name of organization/group

[illegible] for the purpose of presenting the following program:
Club [illegible]

Specific location(s) requested [illegible]

We wish the above facility on the following dates: (An attachment is acceptable)

Day(s) of week	Month	Date(s)	Year	Hours
Sat Sun	June	18/19	2022	1-4 [illegible]

If equipment, lighting, tables, or chairs are required, please specify and indicate any special arrangements needed on the form provided.

There **will** ☐, **will not** ☒ be an admission charge.

The admission will be _____ for adults and _____ for children. The proceeds will be used for _____

The rental fee will include custodial or school personnel services, utility costs, and equipment usage fees, if applicable. *NOTE: Food services charges and technicians are paid separately.*

Two (2) people the District may contact, if necessary, are:

Name: [illegible] Address/City/Zip Code: [illegible]

Signature: [illegible]

Phone (work): [illegible] (home/mobile): 952 210 7565

Name: Joseph Hoegerich Address/City/Zip Code: 11961 E Old Rt 66, Parks AZ 86015

Signature: [illegible]

Phone (work): _____ (home/mobile): 913-526-3229

KF-EB

WILLIAMS UNIFIED SCHOOL DISTRICT #2
PO BOX 427
WILLIAMS, AZ 86046

REQUEST FOR USE OF SCHOOL FACILITIES

Date 11/21, 20 22

TO: ERIC EVANS, SUPERINTENDENT, WILLIAMS USD #2

We, City of Williams Recreation, request the use of a school building facility at
Name of organization/group

WEMS and WHS Gym for the purpose of presenting the following program:

Adult Basketball open gym and Family open gym

Specific location(s) requested GYM and restrooms

We wish the above facility on the following dates: (An attachment is acceptable)

wed and Thursda	Nov-Aug		2022-2023	Wed- 730-9
Day(s) of week	Month	Date(s)	Year	Hours

.. equipment, lighting, tables, or chairs are required, please specify and indicate any special arrangements needed on the form provided.

There **will** ☐, **will not** ☑ be an admission charge.

The admission will be _____ for adults and _____ for children. The proceeds will be used for_____

The rental fee will include custodial or school personnel services, utility costs, and equipment usage fees, if applicable. *NOTE: Food services charges and technicians are paid separately.*

Two (2) people the District may contact, if necessary, are:

Name: Sylvia Lopez Address/City/Zip Code: _____

Signature: Sylvia Lopez

Phone (work): 9286351496 (home/mobile): _____

Name: _____ Address/City/Zip Code: _____

.gnature: _____

Phone (work): _____ (home/mobile): _____

WEMS

Insurance on file Exp. new one sent.

KF-EB

WILLIAMS UNIFIED SCHOOL DISTRICT #2
PO BOX 427
WILLIAMS, AZ 86046

REQUEST FOR USE OF SCHOOL FACILITIES

Date 9/14, 20 22

TO: ERIC EVANS, SUPERINTENDENT, WILLIAMS USD #2

We, City of Williams, request the use of a school building facility at
Name of organization/group

WEMS Gym for the purpose of presenting the following program:

Family Open Gym to k-8th grade and their families

Specific location(s) requested WEMS GYM

We wish the above facility on the following dates: (An attachment is acceptable)

Starting September 29th and All Thursdays unless there is an event. 6:30pm-9pm

Day(s) of week Month Date(s) Year Hours

During sports if we could still be at 630pm 2022-2023

If equipment, lighting, tables, or chairs are required, please specify and indicate any special arrangements needed on the form provided.

need access to bathrooms also.

There **will**___, **will not** X be an admission charge.

The admission will be _____ for adults and _____ for children. The proceeds will be used for_____

The rental fee will include custodial or school personnel services, utility costs, and equipment usage fees, if applicable. *NOTE: Food services charges and technicians are paid separately.*

Two (2) people the District may contact, if necessary, are:

Name: Sylvia Lopez Address/City/Zip Code: 113 S. 1st st Williams AZ 86046

Signature: Sylvia Lopez

Phone (work): 928.635.1496 (home/mobile): _____

Name: Tim Pettit Address/City/Zip Code: 113 S.1st St Williams AZ 86046

Signature: _____

Phone (work): 928.635.4451 EXT 201 (home/mobile): _____

KF-EB

WILLIAMS UNIFIED SCHOOL DISTRICT #2
PO BOX 427
WILLIAMS, AZ 86046

REQUEST FOR USE OF SCHOOL FACILITIES

Date 2/21, 20 23

TO: ERIC EVANS, SUPERINTENDENT, WILLIAMS USD #2

We, williams little league, request the use of a school building facility at
Name of organization/group

WEMS & WHS for the purpose of presenting the following program:

Little league - skills assessment, practices

Specific location(s) requested WEMS gym & available field, WHS baseball & softball fields

We wish the above facility on the following dates: (An attachment is acceptable)

TBD march - July 2023

Day(s) of week Month Date(s) Year Hours

If equipment, lighting, tables, or chairs are required, please specify and indicate any special arrangements needed on the form provided.

There **will** [ ], **will not** [X] be an admission charge.

The admission will be _____ for adults and _____ for children. The proceeds will be used for_____

The rental fee will include custodial or school personnel services, utility costs, and equipment usage fees, if applicable. *NOTE: Food services charges and technicians are paid separately.*

Two (2) people the District may contact, if necessary, are:

Name: Erhard Gonzalez Address/City/Zip Code: _____

Signature: _____

Phone (work): _____ (home/mobile): 858 736 4252

Name: Lourdes Maya Address/City/Zip Code: _____

Signature: _____

Phone (work): _____ (home/mobile): 602 577 1769

KF-EB

WILLIAMS UNIFIED SCHOOL DISTRICT #2
PO BOX 427
WILLIAMS, AZ 86046

REQUEST FOR USE OF SCHOOL FACILITIES

Date 2/9, 20 23

TO: ERIC EVANS, SUPERINTENDENT, WILLIAMS USD #2

We, Susan Daly + AYSO Region #257, request the use of a school building facility at
Name of organization/group

Williams Elementary MS Field for the purpose of presenting the following program:
AYSO Summer Soccer.

Specific location(s) requested Middle School FIELD -

We wish the above facility on the following dates: (An attachment is acceptable) End of season might be end of August.

Day(s) of week	Month	Date(s)	Year	Hours
Saturdays	June -	September	2023	
Some weekdays	May-	September	2023	-occasional evenings

If equipment, lighting, tables, or chairs are required, please specify and indicate any special arrangements needed on the form provided.

There **will**___, **will not** X be an admission charge.

The admission will be Ø for adults and Ø for children. The proceeds will be used for N/A

The rental fee will include custodial or school personnel services, utility costs, and equipment usage fees, if applicable. *NOTE: Food services charges and technicians are paid separately.*

Two (2) people the District may contact, if necessary, are:

Name: Susan Daly Address/City/Zip Code: PO BOX 13, WILLIAMS, AZ 86046

Signature: Susan D. Daly

Phone (work): 928 635 4461 (home/mobile): 602 538 7105

Name: Kelsey Skinner Address/City/Zip Code: PO BOX 966 86046

Signature: Kelsey Skinner

Phone (work): WEMS (home/mobile): 360 333 5134

Water Conservation Grant Fund Application Evaluation
Round 1

Williams Unified School District – Water Conservation Program Turf Conversion	**WC1-060-2023**
Grant Amount	$2,158,500.00
Category	Turf Removal
Summary	The School District will use this grant to convert one football field, two baseball fields, one soccer field, and a softball field, into multi-purpose synthetic turf fields in the City of Williams.
Location	City of Williams, Coconino County
Estimated water savings in acre-feet per year	39
Duration of project/program	Three years for implementation - Estimated completion of two field conversions by the end of 2023, the third field conversion by end of 2024, fourth by end of 2025, and the fifth by May of 2026. Applicant expects conservation benefits to continue well into the future.

Conservation Activity Benefits and Results

Statutory Evaluation Criteria #1, #2, and #4

Activity Type	Programs and projects that reduce water use Per A.R.S. 49-1332(B)(2)
Source of water	The City of Williams Water System is comprised of three wells- the two Dogtown wells and the Rodeo well. A fourth well, Santa Fe produces a minor amount of water for the city. These wells are tapped into the Redwall-Muav (RM) aquifer.
Community information	Williams encompasses 44 square miles and has an estimated population of approximately 3,300 people.
Costs and benefits of project/program	The program will significantly reduce water use and negative environmental impacts. There are several benefits to the school district, youth, community, and the water resources. The financial burden of maintaining grass fields is significant for such a small rural school district. When outlining the financial differences between the annual maintenance for grass verses turf was shocking. The district believes there would be a financial benefit in addition to the water conserved and the reduced strain on the community's water/water treatment system.

Funding Sources

Statutory Evaluation Criteria #3 and #5

Eligibility for LTWAF or WSDF	

	Williams USD assesses they are not eligible, WIFA staff finds that they would meet WSDF eligibility. It is unclear whether this type of conservation program would be feasible with a repayment obligation under the WSDF.
Leverage of multiple funds	They will use the federally funded Unrestricted Capital Outlay (UCO) 610 account to fund the portions of the program not covered by the grant. They currently have $100,000 available for fiscal year 2023 and are budgeting the balance of the cash matching funds across fiscal years 2024, 2025 and 2026. In addition to federal funding, they will also be using the Arizona Tax Credit monies identified by sport to supplement the program, approved by their site council. They will also be reaching out to parents and the booster clubs to do fundraisers and encourage more people to invest in their athletic programs through donations and Tax Credit.
Source of funding and match	The total amount for the Williams Athletic Fields Water Conservation Program is $2,878,000. 25% of the total is $719,500, the district will budget the match over the three fiscal years with a completion date of no later than June 1st, 2026. Salaries - $258,000 Maintenance & Operation (M&O) Capital Expenses $319,500 Unrestricted Capital Outlay (UCO) In-Kind $142,000 Volunteer hours, District administrative costs, and Prepping Equipment (Cost Share, Community Partnerships)

Capacity, Feasibility, & Public Comment
Statutory Evaluation Criteria #6, #7, and #8

Qualifications and capacity of applicant	The School District has undertaken many large federally and state funded projects over its 119 years of existence. They have existing accounting and personnel policies and procedures (P&P) that include the necessary controls to meet federal and state funding requirements. The administrators, school board, athletic director, coaches, parents, and community are reportedly in full support of the program. The district will do its due diligence in selecting the best contractor for the synthetic turf. They have already been collecting recommendations from other Northern Arizona districts. Eric Evans, Superintendent Brianne Ford, Business Manager Joe Howe, Maintenance Director Board President, John Romero

Water Conservation Grant Fund Application Evaluation
Round 1

Feasibility of project/program	They can have the fields surveyed and quotes obtained from contractors. They have reached out to other districts in Northern Arizona (Bradshaw Mountain High School and Flagstaff High School) to get recommendations for contractors to reach out to and to get verbal financial and time estimates for this grant proposal. The initial study gives them confidence that the program will be completed prior to the end of fiscal year 2026.
Public comments	They report having community support. With the financial support this grant will provide they envision creating a snowball effect for other water conservations projects and programs springing up throughout the area. They have an active boaster club, community organizations that provide $100,000 in academic scholarships to high school seniors every year. Williams generally has the largest fan following home and away, with support from community partners and leadership.

Technical Review:

The Applicant **has provided a current SAM.GOV UEI #** which allows them to apply for federal funds. The applicant has completed all steps in the grant application process and is requesting funding for a project / program that is acceptable under the regulations.

Expenditure Code 5.8 Clean Water: Water Conservation

ARPA Final Rule (31 CFR Part 35 RIN 1505–AC77) defines water infrastructure projects as "eligible projects under the Clean Water State Revolving Fund." "A project shall meet the criteria of CWSRF eligibility found in Section 603(c) of the Clean Water Act (CWA)". Specific Expenditure Codes were created to define activities available under the water infrastructure category.

The Interagency Service Agreement (ISA-ARPA-WIFA-070122-01) between the State of Arizona, Office of the Governor and WIFA required the project / program be specific to Expenditure Code 5.8 Clean Water: Water Conservation.

WIFA staff find this project / program is consistent with Expenditure Code 5.8 Clean Water: Water Conservation as determined in Section 603c of the Clean Water Act (CWA) and the ISA.

Attachments:

- Williams School District - WC1-060-2023 Application
- Budget
- Cost Analysis
- News Article
- Partnership Agreements

Evaluation Criteria Statutory Reference:

49-1334. **<u>Evaluation criteria for water conservation programs and projects from the water conservation grant fund; procedures</u>**

The authority shall determine the order and priority of water conservation programs and projects proposed to be funded in whole or in part with monies from the water conservation grant fund based on the following, as applicable:

1. The extent to which the water conservation program or project achieves one or more of the results prescribed by section 49-1332, subsection A.
2. The costs and benefits of the water conservation program or project, including environmental costs and benefits.
3. If the water conservation program or project is eligible for funding from the long-term water augmentation fund established by section 49-1302 or the water supply development revolving fund established by section 49-1271 and if the nature of the water conservation program or project makes funding from the long-term water augmentation fund or the water supply development revolving fund impractical.
4. The ability to provide multiple benefits.
5. The degree to which the water conservation program or project will maximize or leverage multiple available funding sources, including federal funding.
6. The qualifications and capacity of an applicant.
7. The feasibility of the water conservation program or project.
8. Public comments.

WCGF Committee Evaluation:

☐ Recommend Rejection of Grant Application

☐ Recommend Approval of Grant Application

☐ Recommend Approval of Grant Application with Modifications

Tab 14

AGENDA ITEM:
Recommend Approval of Grant Application WC1-061-2023 – City of Yuma – WCGF – $3,000,000

ACTION REQUIRED:
Review, Discuss & Recommend Approval

PREVIOUS ACTION:
None

STAFF CONTACT:
Lindsey Jones

RECOMMENDED DISCUSSION TIME:
5 Minutes

ATTACHMENTS:
- Grant Application WC1-061-2023 – City of Yuma
- Water Conservation Grant Fund Evaluation

STAFF COMMENTS:
None

City of Yuma Irrigation Standards Modernization

Profile : madeleine.coil@yumaaz.gov

Entity Name: : City of Yuma

I. General Information

1. Title of Project: : City of Yuma Irrigation Standards Modernization

2.Type of Conservation Activity (A.R.S. § 49-1332(B)): : Programs and projects that reduce water use Per A.R.S. 49-1332(B)(2)

Note: for the purpose of the application, the term project and program will be referred to as “conservation activity”

3. Is this for an individual Water Conservation Project or a general Water Conservation Program? : Water Conservation Programm

Please describe the specific components that make it a program. : The specific components which make the City of Yuma Irrigation Standards Modernization a program are: 1) City of Yuma Parks and Recreation will be able to implement new irrigation technology and turf reduction City-wide. This program begins at a 190 acre site of the Yuma Civic Center and two golf courses. New materials and methods can then be implemented at an additional 410 acres of parks, facilities and for new development in future decades. 2) The program includes replacing outdated City specifications for new landscape construction and renovations into the foreseeable future. Existing specifications, means and methods date from the 1990's and do not focus on conservation. 3) The program introduces advanced monitoring capabilities for irrigation water conservation with new meters, central irrigation control software and weather stations. At present the City cannot accurately monitor how much irrigation water is used, therefore there is no basis in which to judge water conservation efforts.

4. What is the location of conservation activity?

City: : Yuma

County: : Arizona

Program/Project Congressional District (check all that apply) :

3

4

Program/Project Legislative District (check all that apply) :

7

9

Watershed : Not applicable.

Active Management Area (if applicable): : Not applicable

Irrigation Non-Expansion area (if applicable): : Not applicable

5.Conservation Activity Cost

Amount requested from the WCGF for this activity: : $3,000,000.00

Amount of matching funds: : $1,700,000.00

Total conservation activity cost: : $4,700,000.00

When applying for the grant, note that a single water conservation program grant may not exceed $3,000,000. A single water conservation project grant may not exceed $250,000. The WCGF requires at least a twenty-five percent match for each water conservation program or project.

6. What is the estimated water savings in acre-feet per year? : 480

Explain calculation: : Over a four year period 2016 through 2019, the most recent years with accurate meter data, the 190 acre parcel in this program's first phase used an average of 872 acre feet annually. After turf reductions and new irrigation estimated water use is 670 acre feet. The estimated water savings is 202 acre feet per year. The 190 acre parcel currently has 165 acres of irrigated turf. Our turf reduction plan eliminates 31 acres. The remaining 134 acres irrigated at a rate of 5 acre feet per year equals 670 acre feet. Phoenix, Tucson and other hot climate Arizona cities have mandated 5 acre feet per acre of landscape with generally successful results. The City's landscape architect has stated Yuma should adopt the same efficiency standards, and the same 23% water savings for the first phase can be applied to the entire City recreation acreage.

7. What is the expected duration of the conservation activity? : The first phase of this program includes renovating 190 acres or approximately ⅓ of the Parks and Recreation Department maintained area. Plans and specifications for this phase have been produced by a landscape architect so that the project can be put out to public bid in 2023. Installation of irrigation systems, turf reductions and new irrigation technology is scheduled to take place between March 1st and end of November, 2024. When the program is applied to the remaining 410 acres of Parks and Recreation properties, this program could extend out for the next decade or more.

II. Conservation Activity Benefits and Results

8. What is the water conservation activity you propose to fund with grant monies? Describe in detail. : The City of Yuma Parks and Recreation department maintains approximately 600 acres of public parks and grounds. The WCGF grant would fund a renovation of about ⅓ of this area or 190 acres, consisting of new technologically advanced irrigation systems, turfgrass reduction, smart water meters, pump major maintenance, landscape drainage and weather stations. City personnel would be trained in new maintenance techniques with specific duties directly related to water conservation. This grant would also fund a new cloud-based irrigation monitoring and control system to enable the City to track the effectiveness of these improvements.

9. What is the source of the water that will be conserved? If it is mainstem Colorado River water or Colorado River water delivered through the Central Arizona Project, please clearly indicate so. : Colorado River water is diverted at Imperial Dam pursuant to the City's water rights and contracts with local water districts and the United States Bureau of Reclamation (USBR). The USBR provides a base amount of 50,000 acre-feet per year. In addition to the base allotment, the City has acquired delivery rights to 25,000 additional acre-feet of water making a total annual water allotment of approximately 75,000 acre-feet. Approximately 63% is delivered to the Main Street Water Treatment Facility by the Yuma County Water Users Association, and 35% is delivered to the Agua Viva Water Treatment Facility by the Gila Gravity Canal System. The remaining 2% is groundwater from three City owned wells.

10. Describe the community (population size, demographics, principal economic activities, etc.) impacted by the conserved water. : Nestled in the Yuma and Gila Valleys, the City of Yuma lies in the southwest corner of the United States' Lower Sonoran Desert on the California-Mexico-Arizona border, near the convergence of the Colorado and Gila rivers. An estimate of approximately 210,000 full-time residents live inside and outside the City's boundaries. The coordinates are 32°47′13″N 113°58′58″W. The City of Yuma has an area of 121 square miles and a population of 97,000 (2021). Winter tourism is a major local industry with approximately 80,000 additional residents from January to April each year. Of any populated place in the contiguous United States, Yuma is the driest, sunniest, least humid, lowest frequency of precipitation, and the highest number of days per year with maximum temperature of 90°F or higher. Summer temperatures reach well above 100°F. Annual precipitation is less than 3 inches. Agriculture is also a principal industry, and the U.S. Marine Corps Air Station Yuma is home to 12,000 active duty military, family and civilians. According to the United States Census Bureau, Yuma County has an area of 5,519 square miles (14,290 km2), of which 5,514 square miles (14,280 km2) is land and 5.1 square miles (13 km2) (0.1%) is water.[23] The lowest point in the state of Arizona is on the Colorado River in San Luis in Yuma County, where it flows out of Arizona and into Sonora in Mexico. Yuma County is in the west, and northwestern regions of the north–south Sonoran Desert that extends through Sonora state of Mexico to the border of northern Sinaloa state. West of the County across the Colorado River in southeast California is the Colorado Desert, (a northwestern subregion of the Sonoran Desert). North of the county, with La Paz County the regions merge into the southeastern Mojave Desert. Southwest of Yuma County, is the entirety of Northwest Mexico, at the north shoreline of the Gulf of California, and the outlet of the Colorado River into the Colorado River Delta region, now altered with lack of freshwater inputs. Notable mountains in Yuma County include the Gila Mountains and the Tule Mountains. Yuma County is the highest crop producer in the state by dollar value per year. Yuma County tops the list for the categories of vegetables + melons + potatoes + sweet potatoes at $782,293,000, and fruits + tree nuts + berries at $62,499,000. Overall, this is the second (to Maricopa) producing county for all agricultural products at $1,143,068,000 per year and for organic production. Almost all of the dates (Phoenix dactylifera) in the state are grown here, about 10 million pounds (4,500 metric tons; 5,000 short tons) worth $35 million per year. This is the second highest citrus producer behind Maricopa, a distant second in grapefruit, limes, and oranges but producing far more lemons. Some olives, clingstone peaches, and plums are grown here. Yuma County produces almost all of the vegetable seed grown in the state. During the winter agricultural season from November to March, some 40,000 migrant workers cross the border daily to work in United States fields. The area is watered by the Colorado River, and the sector supplies a large part of the US leafy vegetables. The Yuma Lettuce Days festival and agritourism is connected to Yuma agriculture. In 2017 the county produced vegetables worth $782,293,000, ranking first in the state and third in the entire country, from 107,908 acres (43,669 ha). Fruits brought $62,499,000, also first in the state, 56th out of >3000 counties in the country.[8] Jojoba (Simmondsia chinensis) is a valuable native crop here. From here it has also been introduced into cultivation in other countries.

11. What is the extent to which your water conservation activity achieves one or more of the following (select all that apply): :

value1

value2

Describe: : Long term reduction in water use is achieved through turf reduction and much more efficient irrigation materials, means and methods. We have estimated a savings of 23% irrigation water is very achievable. Removal of turfgrass and converting to natural desert landscape, or enhanced with drip irrigation, is a permanent change which leads to direct water savings every year. Although used for decades, the current City specifications call out PVC pipe irrigation systems which are highly inefficient and unreliable over time. PVC specifications actually allow 5% water loss due to leaks through pipe joints. Additionally, the lifespan of PVC irrigation pipe in Arizona is only 25 to 30 years. By comparison, the proposed new irrigation program specifications call out high density polyethylene pipe and fittings. The pipe and fittings are fused with heat and pressure to produce a completely leak free monolithic pipe network. The HDPE pipe we propose to use has a proven service life of 100 years as stated by the Plastic Pipe Institute.

12. What is the extent to which your water conservation activity addresses one of more of the following: :

Water supply shortages

Describe: : This program features an advanced irrigation control system, cloud-based, to more accurately control vast areas of irrigated acreage. Whenever water restrictions or shortages occur the City will be able to react quickly to decrease the amount of irrigation, or pick and choose which area types can withstand no irrigation at all. With site specific weather stations the control system will have ability to adjust irrigation run times based on daily evapotranspiration rates.

13. How will your water conservation activity align with a local, regional, or statewide water plan or integrated resource management plan? : The City of Yuma has an established Water Conservation Plan that is updated every five years at a minimum. The current conservation plan was published in 2020. The City also has a Drought Preparedness and Response plan mandated by the State of Arizona which is updated every five years, the most recent version 2022. These existing programs focus on residential customers, whereas the new program supported by this WIFA grant primarily affects parks and recreational facilities. The current Water Conservation Plan makes suggestions on how to conserve landscape water, but the program supported by the WIFA grant will change specifications to directly implement changes on all future City landscape projects.

14. What are the costs and benefits of your water conservation activity, including any environmental impacts? : The irrigation systems proposed under this program have an overall service life of 50 years, with the HDPE pipe infrastructure 100 years. Our proposed system also uses 70% less copper wire due to new technology. By comparison, the City's current specifications use PVC pipe, ductile iron fittings and other materials with a service life of 30 years. The primary materials used in irrigation systems are petroleum based plastics and copper wire. Therefore, with a lifespan 66% longer there will be less non-recyclable materials needed for future replacements. Another important part of this program is returning irrigated turf areas, consisting of non-native grasses, back to pure natural desert or slightly enhanced desert landscape with drip irrigation.

15. How will you measure the effectiveness of the conservation activity? : The City's GIS department can measure existing irrigated acreage before and after the proposed turfgrass removals. Applying an efficient irrigation water use standard of 5 acre feet per irrigated turf acre will provide a baseline quantity of water required for irrigation. Daily, weekly and annual data logging from new water meters, pump panels, new central irrigation control system will provide statistics on how much water is actually being used. If the City reduces overall turf acreage, then adheres to 5 acre feet per acre or less standard, then its conservation goals will be realized. The WCGF grant will enable the City to acquire modern hardware and software needed to perform these analyses. At the present time, existing meters and irrigation controls are not capable of gathering data on water use so conservation efforts cannot be measured.

III. Funding Sources

16. If your water conservation activity is eligible for funding from WIFA's Long-Term Water Augmentation Fund or Water Supply Development Fund, does the nature of your conservation activity make funding from those funds impractical, and why? : While the project is eligible for funding from WIFA's Long-Term Water Augmentation Fund or Water Supply Development Fund it is impractical to fund this project via these funds. It is impractical to leverage additional appropriated funds at this time as funding this project via a loan will adversely affect the City of Yuma bond rating and financial well-being.

17. Would the conservation activity be otherwise implemented without this grant funding? Explain. : The program planning document was prepared with funding from Arizona Office of Tourism. The implementation of the program could not be carried out without WIFA funding.

18. To what extent will your water conservation activity maximize or leverage multiple available funding sources, including federal funding? : For the City of Yuma Irrigation Standards Modernization program we will seek a range of funding sources which incorporate public, private, state and federal mechanisms to maximize support. The City has identified potential funding from the Bureau Of Reclamation; WaterSmart Energy Efficiency Grant, WaterSmart Drought Grant as well as the Water Conservation Field Service Program funding opportunity.

19. Are there cost-sharing opportunities with other applicants or other parties? Explain. : There are no cost-sharing opportunities with other applicants or other parties at this time. We will certainly entertain cost-sharing opportunities with others if we are made aware of any other applicants.

20. What is the source and amount of the match (including in-kind match)? : Match funds of $1,700,000 are available in the City of Yuma Grant contingency funds.

IV. Capacity, Feasibility, & Public Comment

21. What qualifications and capacity do you have for completing your proposed water conservation activity? Include any past managerial deficiencies and provide the name(s) and qualifications of the individual(s) or entities who will be managing this activity. : The hardware, software and projects proposed under this water conservation program can be managed through existing City departments as typical capital improvements. Turf removals, new irrigation systems, weather stations, pump maintenance, meters, are all items that can be processed through the City Purchasing department. Landscape architects, consultants to train City personnel, can also be hired through the typical RFP process. After improvements are finished, Parks and Recreation department personnel will handle maintenance and monitoring. The lead City agencies would be Parks and Recreation, Purchasing, and possibly Public Works.

22. Will there be significant management impacts as the result of the proposed conservation activity, or any technology associated with the conservation activity? (For example: additional costs or staffing requirements) : City of Yuma Parks and Recreation oversees the operation and maintenance of over 600 acres of public facilities, consisting of 40 parks, 9 athletic complexes, 2 golf courses and the grounds of 19 City buildings. Parks and Recreation employees who manage and maintain these properties will need to receive additional training on the new materials, means and methods. The City may need to recruit a new Irrigation and Conservation Specialist which is a common position in other Arizona cities.

23. Will the proposed conservation activity promote collaborative partnerships to address water-related issues? Explain. : Yes, the proposed City of Yuma Irrigation Standards Modernization program will promote collaborative partnerships to address water-related issues. Partnerships have been formed internally as well as within the Yuma community, The internal partnerships include; City of Yuma Parks Department, Civic Center, Public Works,

Utilities, Engineering and Purchasing. The external partnerships include; Yuma County, United State Bureau of Reclamation, Yuma County Water User Association, as well as utilization of the program plan by school dsitricts, other parks and other large scale turf irrigation users.

24. What is the stakeholder involvement in the conservation activity planning process? : There has been stakeholder involvement in the program plan, program goals and expected program impact on local Yuma irrigation sources. City Departments involved includes Utilities, Finance, Engineering, Public Works and Parks and Recreation. City divisions include Purchasing, Parks and Desert Hills Golf Course. The main workgroup participants met with our Landscape Architect including the Golf Course Superintendent, Golf Course Crew Leader, Golf Course Mechanic, Supervisor of Golf, Golf Shop Supervisor, Parks Manager and Golf Operations Manager. These are the various City Departments that have been consulted during the process and have reviewed various sections of the work and provided comments and assistance.

25. Will the proposed conservation activity include public outreach and opportunities for the public to learn about the conservation activity? Explain. : A full education program will be launched via social media, print and radio. A PSA program notifying of the course closure and the water conserving purpose of the project will also be developed.

26. Is there community and/or sector support for the conservation activity? Explain. : The City has embarked upon a water conservation education program developed for its citizenry and surrounding County residents. The program highlights strategies that residents can employ to reduce the overall water consumption in our area. This includes among other things, converting turf to desert landscaping. The Parks Department is currently converting select turf areas to serve as demonstration sites. This project will be an extension of that effort. In addition, the project specifications relating to the irrigation system will be used as a template to conserve water at homes and businesses.

27. How feasible is it to complete your water conservation activity? Explain. : Most of the improvements proposed under this new program are 90% completed in the design process by an Arizona landscape architecture firm. Since the project has already been in the capital improvements process for quite awhile, feasibility and likelihood of going to construction is very high. Without these improvements the City will continue to spend hundreds of thousands of dollars on repairing leaky old irrigation systems, watering many unnecessary acres of turf, which is not sustainable.

28. If the conservation activity is a continuation of ongoing activities, has the activity been shown to be effective? If a new activity, has the proposed project, technology, or technique previously been implemented? : The City already has established conservation programs that include public education, literature and notices, landscaping ordinances and other measures primarily targeted to 110,000 City utility customers. Our proposed program focuses on approximately 600 acres of landscaped public facilities over 70 sites and not individual residential users. The technology we propose is not brand new, there are many successful examples using the same materials and methods with excellent results. This is especially true in California in response to recent state mandated water restrictions that required substantial turf and irrigation water reduction.

29. Will the proposed conservation activity implement an established Best Management Practice? Explain. : The proposed program incorporates a variety of BMP's currently being used by municipal water managers throughout the Southwest: 1) New irrigation with 50 year lifespan; a 66% increase over current specifications. 2) Uses fusion joined HDPE pipe that is expected to be leak free for 100 years. 3) Reduces water intensive turfgrass; increases low and no water use landscaping. 4) Uses cloud-based irrigation control software that can be expanded City-wide. 5) New meters, pump improvements, weather stations for conservation monitoring. 6) Provides City staff training on new irrigation techniques and materials.

Additional Supporting Documentation (pdf, jpg, word, excel) : Federal Forms City of Yuma Irrigation Standards Modernization.pdf

Additional Supporting Documentation (pdf, jpg, word, excel) : Photos of Waterline Breaks.pdf

Additional Supporting Documentation (pdf, jpg, word, excel) : Yuma_IrrigSpecs_042023.pdf

Additional Supporting Documentation (pdf, jpg, word, excel) : Yuma_Basemap2_042023.pdf

Additional Supporting Documentation (pdf, jpg, word, excel) : Copy of WCGF Budget Template_City of Yuma Irrigation Standards Modernization.xls

Average Score :

# of Reviews : 0

# of Denials : 0

Please use the following link to view the Budget

Budget Worksheet :

View Budget Worksheet : https://portal.ecivis.com/#/peerBudget/F35BBC61-2F4D-4A2B-86A9-01B6F02DBAA9

Application Goals :

View Application Goals : https://portal.ecivis.com/#/peerGoals/29EF961F-7E48-4F48-9B23-4B1FA7C159EF

Created by : zengine+36768@srm.ecivis.com

Record ID # : 50268038

Last change : 2023-05-18T19:49:42+0000

Budget Table

Grant Award Budget For:

FY 2023 Water Conservation Grant Fund (WCGF)

WATER INFRASTRUCTURE FINANCE AUTHORITY OF ARIZONA

Project Name:

Budget Items

Category	Title	Units	Unit Cost	Extended Cost	Direct Cost	Indirect Cost	Cost Share
Personnel							
	Personnel	2	$80,000.00	$160,000.00	$0.00	$0.00	$0.00
Personnel Total		**0**	**$0.00**	**$160,000.00**	**$0.00**	**$0.00**	**$0.00**
Fringe Benefits							
	Fringe Benefits	2	$20,000.00	$40,000.00	$0.00	$0.00	$0.00
Fringe Benefits Total		**0**	**$0.00**	**$40,000.00**	**$0.00**	**$0.00**	**$0.00**
Travel							
	Travel	2	$0.00	$0.00	$0.00	$0.00	$0.00
Travel Total		**0**	**$0.00**	**$0.00**	**$0.00**	**$0.00**	**$0.00**
Equipment							
	Equipment	1	$1,810,000.00	$1,810,000.00	$0.00	$0.00	$0.00
Equipment Total		**0**	**$0.00**	**$1,810,000.00**	**$0.00**	**$0.00**	**$0.00**
Supplies							
	Supplies	1	$200,000.00	$200,000.00	$0.00	$0.00	$0.00
Supplies Total		**0**	**$0.00**	**$200,000.00**	**$0.00**	**$0.00**	**$0.00**
Contractual							
	Contractual	0	$0.00	$0.00	$0.00	$0.00	$0.00
Contractual Total		**0**	**$0.00**	**$0.00**	**$0.00**	**$0.00**	**$0.00**
Construction							
	Construction	1	$2,290,000.00	$2,290,000.00	$0.00	$0.00	$1,700,000.00
Construction Total		**0**	**$0.00**	**$2,290,000.00**	**$0.00**	**$0.00**	**$0.00**
Indirect Costs							

Budget Table

	Indirect Cost	1	$200,000.00	$200,000.00	$0.00	$0.00	$0.00
Indirect Costs Total		**0**	**$0.00**	**$200,000.00**	**$0.00**	**$0.00**	**$0.00**
Other							
	Other	0	$0.00	$0.00	$0.00	$0.00	$0.00
Other Total		**0**	**$0.00**	**$0.00**	**$0.00**	**$0.00**	**$0.00**
				$4,700,000.00			

Desert Hills Golf Course Irrigation Renovation Plan

City of Yuma, Arizona

90% PLAN SET
NOT FOR CONSTRUCTION

VICINITY MAP

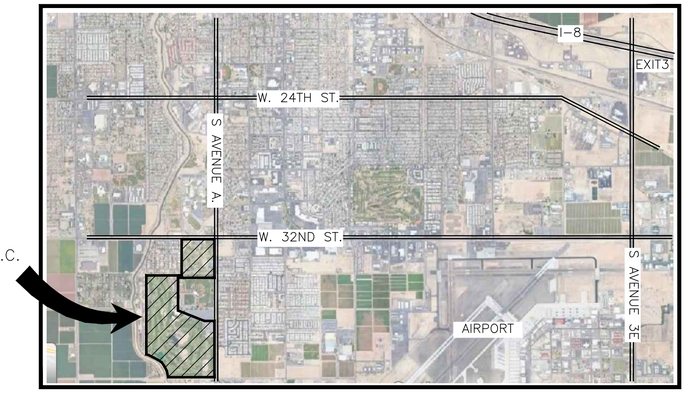

GENERAL BIDDING & CONSTRUCTION NOTES

1. ARCHITECT PROVIDED QUANTITIES ARE APPROXIMATE CONTRACTOR IS RESPONSIBLE FOR ITS OWN BID QUANTITIES.
2. MATERIALS SUBSTITUTIONS NOT ALLOWED WITHOUT PRIOR WRITTEN APPROVAL FROM ARCHITECT AND CITY.
3. REPORT ANY DISCREPANCIES BETWEEN PLANS, SPECS AND FIELD CONDITIONS TO ARCH AND CITY PROMPTLY.
4. CITY, COUNTY, STATE POLICIES AND SPECIFICATIONS TAKE PRECEDENCE OVER ARCHITECT PLANS AND SPECS.
5. FIELD REVISIONS AND MINOR CHANGES MUST BE PART OF CONTRACTOR BID SEE SPECIFICATIONS SECTION 1.6.
6. DAMAGE TO GOLF COURSE AND TURFGRASS SHALL BE REPAIRED USING USGA SPEC MATERIALS AND STANDARDS.
7. WORK SITES SHALL BE OPERATIONAL, CLEANED UP AND READY FOR GOLF PLAY BEFORE MOVING TO NEW AREAS.
8. EXISTING IRRIGATION AND PUMP MUST REMAIN OPERATIONAL THROUGHOUT NEW SYSTEM INSTALLATION.
9. CONTRACTOR SHALL COORDINATE WITH PHGC DAILY TO ACCOMMODATE GOLF AND MAINTENANCE OPERATIONS.
10. OLD SPRINKLER HEADS, COUPLERS, CONTROLLERS SHALL BE REMOVED AND DELIVERED TO DHGC STAFF.
11. GPS OR SIMILAR MAPPING REQUIRED FOR AS-BUILT NOTES AND TO DOCUMENT MONTHLY PAY REQUESTS.
12. RAIN BIRD, TORO AND HUNTER GOLF PRODUCTS ARE APPROVED. NO OTHER BRANDS MAY BE BID OR INSTALLED.
13. CONTRACTOR IS RESPONSIBLE FOR ALL GROUNDING, ELECTRICAL CONNECTIONS AS DEPICTED ON THESE PLANS.
14. OLD SAND FROM BUNKER RENOVATIONS SHALL BE DEPOSITED AT STOCKPILES IN EXISTING WASTE AREAS.
15. EXTRA DIRT AND SPOILS SHALL BE DEPOSITED ON GOLF COURSE AS DIRECTED BY DHGC STAFF.
16. OLD PIPE, VALVES, ROOTS, TRASH, DEBRIS AND SIMILAR WASTE MUST BE HAULED OFF SITE BY CONTRACTOR.
17. EXISTING PUMP STATION SHALL REMAIN OPERATIONAL AT ALL TIMES. NEW SCOPE CONSISTS OF IMPROVEMENTS ONLY.

LEGEND

- FULL CIRCLE SPRINKLER +/-80 FOOT RADIUS, 1.5" SWING JOINT, TWO-WIRE MODULE
- FULL CIRCLE SPRINKLER +/-63 FOOT RADIUS, 1.5" SWING JOINT, TWO-WIRE MODULE
- ADJ. PART CIRCLE SPRINKLER +/-80 FOOT RADIUS, 1.5" SWING JOINT, TWO-WIRE MODULE
- ADJ. PART CIRCLE SPRINKLER +/-65 FOOT RADIUS, 1.5" SWING JOINT, TWO-WIRE MODULE
- LANDSCAPE STUB-OUT 2" PIPE W/THREADED TRANS ADAPTER, BALL VALVE & WIRE LOOP
- 1" ELEC. DRIP VALVE W/FILTER & 40 PSI REGULATOR; TWO-WIRE MODULE
- 1" ONE-PIECE QUICK COUPLER W/1" SWING JOINT, BRASS OUTLET, SNAP-LOK STABILIZER
- 2" AQUAFUSE 360 DEGREE BUTT FUSE HDPE BALL VALVE OR APPROVED EQUAL
- 2" AQUAFUSE 360 DEGREE BUTT FUSE HDPE BALL VALVE OR APPROVED EQUAL; HORIZONTAL DRAIN VALVE
- 6"-12" CAST IRON MAINLINE GAVE VALVE W/HDPE BUTT FUSE ENDS
- BERMAD C-30 COMBINATION AIR/VACUUM RELIEF VALVE
- 6"-12" PE4710 DR13.5 HDPE BUTT FUSION MAINLINES
- 2" PE4710 DR13.5 HDPE LATERAL PIPE; 500' ROLLS
- APPROXIMATE LOCATION EXISTING MAINLINES
- NEW BUNKER DRAINAGE: 4" PERFORATED PIPE & PEA GRAVEL FRENCH DRAIN
- NEW BUNKER DRAINAGE: 4" SOLID HDPE RIBBED PIPE
- NEW BUNKER DRAINAGE: CLEANOUT W/4" CAP
- NEW GOLF COURSE PLASTIC CATCH BASIN W/GRAVEL SUMP BOTTOM
- TORO & HUNTER SYSTEMS HUB SATELLITE (R.B. SYSTEM HAS NO SATELLITES)
- SURGE DEVICE W/GROUNDING SEE DETAILS FOR EACH BRAND ON SPECIFIC EQUIPMENT
- EXISTING WASTE AREAS - NO IRRIGATED TURF
- PROPOSED TURF CONVERSION TO DESERT LANDSCAPE

SHEET INDEX

T-1	1	TITLE PAGE
IR-1	2	TOPOGRAPHIC & EXISTING CONDITIONS PLAN
IR-2	3	PROPOSED TURF REDUCTION PLAN
IR-3	4	IRRIGATION FLOW ZONES & HYDRAULIC TREE
IR-4	5	IRRIGATION LAYOUT HOLES 1-4, 6-11, 17 & 18
IR-5	6	IRRIGATION LAYOUT HOLES 5, 6T, 12-16, RANGE
IR-6	7	IRRIGATION LAYOUT PAR 3 COURSE
IR-7	8	CONTROL SYSTEM & WIRE 1-4, 6-11, 17 & 18
IR-8	9	CONTROL SYSTEM & WIRE 5, 6T, 12-16, RANGE
IR-9	10	CONTROL SYSTEM & WIRE PAR 3 COURSE
IR-10	11	IRRIGATION INSTALLATION DETAILS
IR-11	12	RAIN BIRD IC SYSTEM DETAILS
IR-12	13	TORO LYNX TWO-WIRE SYSTEM DETAILS
IR-13	14	HUNTER TWO-WIRE SYSTEM DETAILS
IR-14	15	MISCELLANEOUS INSTALLATION DETAILS
LS-1	16	BUNKER DRAINAGE & LANDSCAPE PLAN I
LS-2	17	BUNKER DRAINAGE & LANDSCAPE PLAN II
LS-3	18	BUNKER DRAINAGE & LANDSCAPE PLAN III
LS-4	19	BUNKER & LANDSCAPE INSTALLATION DETAILS
PS-1	20	PUMP STATION SPECIFICATIONS & WORK SCOPE I
PS-2	21	PUMP STATION SPECIFICATIONS & WORK SCOPE II

ABBREVIATIONS LIST

ADJ ADJUSTABLE
APPX APPROXIMATE
ARCH ARCHITECT
A.R.V. AIR RELIEF VALVE
BKR BUNKER, SAND BUNKER
B.F. HDPE BUTT FUSE
B.V. BALL VALVE
C.I. CAST IRON
COMM COMMUNICATION
CONC CONCRETE
CONTR CONTRACTOR
COORD COORDINATE
C.P. CART PATH
DEG DEGREES
DHGC DESERT HILLS GOLF COURSE
D.I. DUCTILE IRON
DR DIMENSION RATIO
ELEC ELECTRIC
E.J. EXPANSION JOINT
E.V. ELECTRIC VALVE
E.W. EXTRA WIRE
EXC EXCAVATE
EXIST EXISTING
F.C. FULL CIRCLE
F.G, FINISHED EARTH GRADE
FLG FLANGE
FWY FAIRWAY
G GREEN, PUTTING GREEN
GND GROUND, GROUNDING
GPM GALLONS PER MINUTE
G.V. GATE VALVE
HDPE HIGH DENSITY POLYETHYLENE
IN INCHES
IRRIG IRRIGATION
NOZ NOZZLE
P.C. PART CIRCLE
PERF 4" PERFORATED PIPE
PSI POUNDS PER SQUARE INCH
Q.C. QUICK COUPLER
RAD RADIUS
R.B. RAIN BIRD
SAT SATELLITE OR HUB
SCH. SCHEDULE PVC
SHT SHEET
SPECS IRRIG. SPECIFICATIONS
S.S. STAINLESS STEEL
STA STATION
SUPV SUPERVISOR
SW.JT. SWING JOINT
TRANS TRANSITION
UTIL UTILITIES
V.I.H. VALVE IN HEAD
V.B. VALVE BOX

IRRIGATION PERFORMANCE SPECIFICATIONS

IRRIGATION PIPE FLOW SPECS TYPE 4710 HDPE DR13.5

SIZE	O.D.	I.D.	MAX.FLOW GPM	PSI LOSS Per 100'	VELOCITY Feet/Sec
12"	12.75	10.8	1500	0.30	5.25
10"	10.75	9.06	1000	0.33	4.98
8"	8.625	7.27	650	0.44	5.02
6"	6.625	5.58	400	0.64	5.25
2"	2.373	2.00	60	3.22	6.13

Notes: Hazen-Williams smoothness coeff.=140 for PE. Fittings factor 10% has been added to all design loss calculations. Lateral lines shall support max. 60 gpm running heads per 2" lateral isolation valve at a time, spread apart, to distribute flow evenly. Lateral loops with (2) valves max. 120 gpm. These figures will be used for hydraulic tree programming.

TWO WIRE MODULE VALVE-IN-HEAD SPRINKLER PERFORMANCE SPECS

RAIN BIRD MODEL	NOZZLE	PSI	RAD.Ft.	GPM	GENERAL USE
A900-IC7052 FULL	52 ORG	70	79	35	FAIRWAY & ROUGH
A702-IC7036 FULL	32 BLU	70	65	23	APPROACH, TEE, NARROW
A950-IC7024 PART	24 YEL	70	80	33	FAIRWAY & ROUGH
A752-IC7032 PART	32 BLU	70	63	20	GREENS, SURROUNDS
TORO MODEL	**NOZZLE**	**PSI**	**RAD.Ft.**	**GPM**	**GENERAL USE**
INF54-558-6 FULL	55 GRN	80	83	38	FAIRWAY & ROUGH
INF54-528-6 FULL	52 BLU	80	64	27	APPROACH, TEE, NARROW
INF55-558-6 PART	55 GRN	80	76	40	FAIRWAY & ROUGH
INF55-528-6 PART	52 BLU	80	61	23	GREENS, SURROUNDS
HUNTER MODEL	**NOZZLE**	**PSI**	**RAD.Ft.**	**GPM**	**GENERAL USE**
GT880-D38P8 FULL	38 RED	80	82	39	FAIRWAY & ROUGH
GT880-D20P8 FULL	20 BRW	80	64	23	APPROACH, TEE, NARROW
GT885-D38P8 PART	38 RED	80	80	39	FAIRWAY & ROUGH
GT885-D20P8 PART	20 BRW	80	64	22	GREENS, SURROUNDS

PROJECT CONTACTS

LANDSCAPE ARCHITECT:
GARY KAYE, Lic. 64604
3053 W OWENS DR.
PHOENIX AZ 85086
Ph. (623) 341-2302
garykaye99@gmail.com
www.garykayedesign.com

GOLF COURSE CONTACT:
ANDREW SMITH, GOLF OPERATIONS Mgr.
1245 DESERT HILLS DRIVE
YUMA, AZ 85365
Ph. (928) 373-5220
drew.smith@yumaaz.gov
www.cityofyumagolf.com

CONTRACT ADMINISTRATION:
CITY OF YUMA ACCOUNTING DEPT.
ONE CITY PLAZA
YUMA, AZ 85364
Ph. (928) 373-5083
payables@yumaaz.gov

CALL AZ BLUE STAKE SYSTEM SEVEN (7) DAYS PRIOR TO ANY EXCAVATION

CITY OF Yuma
City Hall, 1 City Plaza, Yuma AZ 85364 ph. (928) 373-5000

Gary Kaye Design & Project Management
3053 W. Owens Dr. Phoenix AZ 85086
(623) 341-2302 garykayedesign@gmail.com

Title Sheet
Desert Hills Golf Irrigation Renovations
Owner: City of Yuma, Arizona

RFP#: 23-067
Drawn By: GSK
Approved: GSK
Date: 4/16/2023

REGISTERED LANDSCAPE ARCHITECT
CERTIFICATE NO. 64604
GARY S. KAYE
Date Signed
ARIZONA, U.S.A.

Date	Revisions	By

Sheet
T-1
1 of 21

ORIGINAL SHEET SIZE: ARCH D 24x36

C:\Users\HP\Desktop\LandscapeArchitect\2022_Yuma\Yuma_Basemap2.dwg, 4/23/2023 9:41:48 PM, _AutoCAD PDF (General Documentation).pc3

90% PLAN SET
NOT FOR CONSTRUCTION

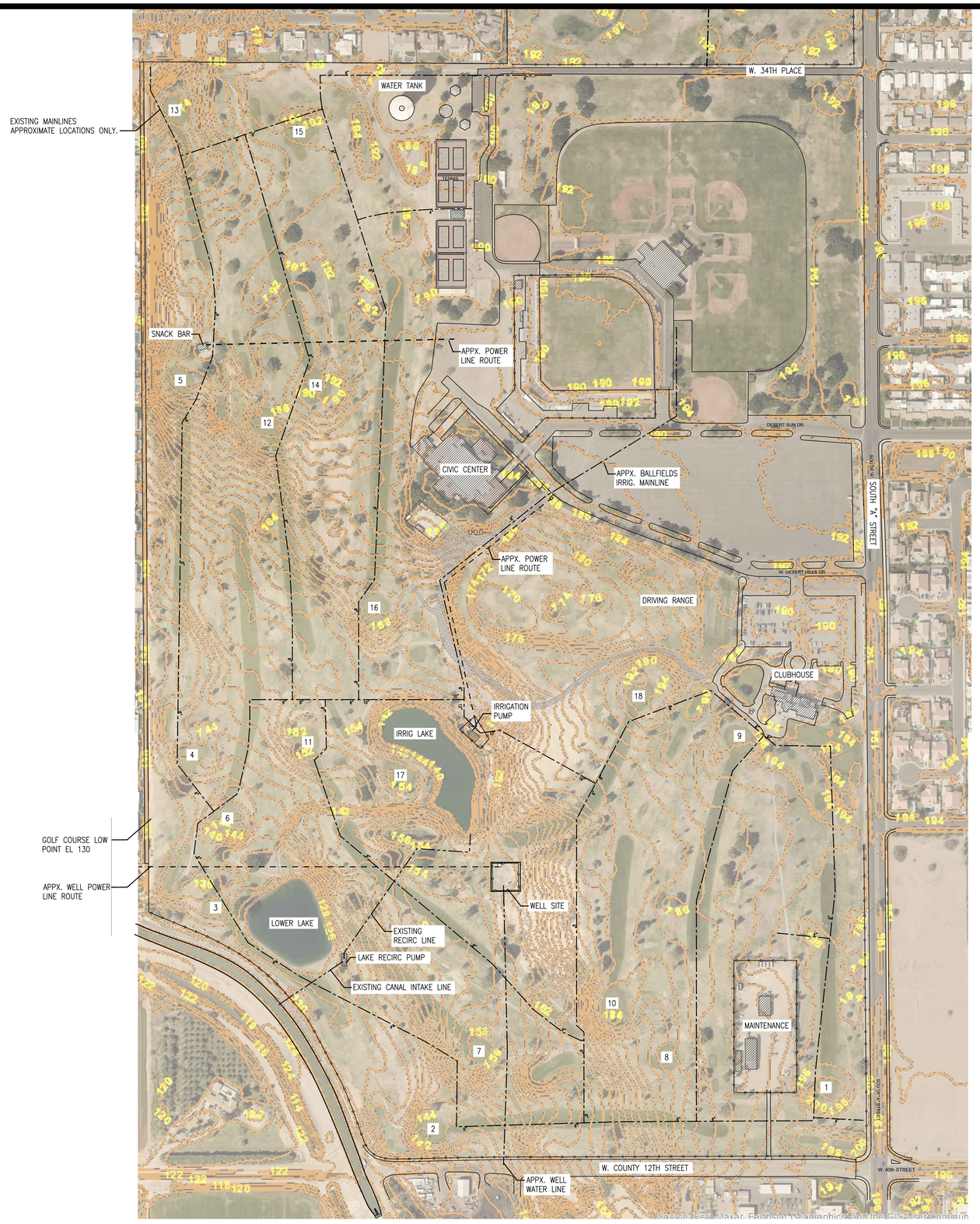

DESERT HILLS GOLF COURSE

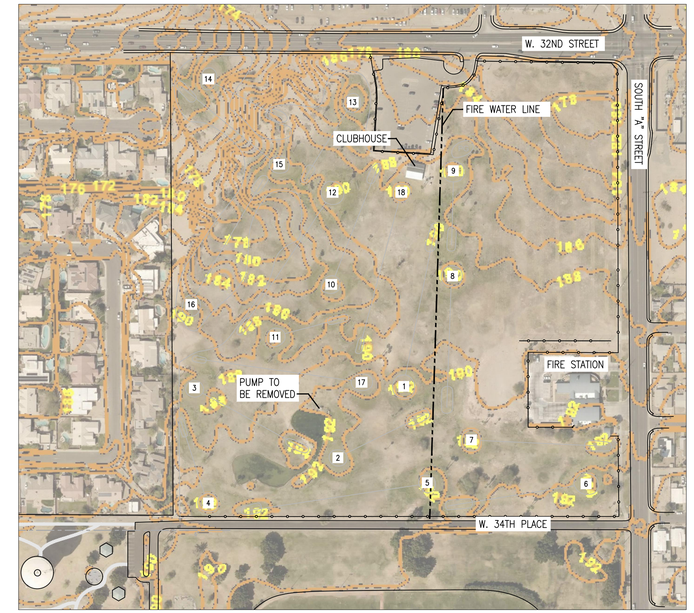

PAR 3 GOLF COURSE

EXISTING CONDITIONS & FACILITIES NOTES

1. EXISTING IRRIGATION SYSTEM WILL BE KEPT ALIVE UNTIL MINIMUM 75% OF NEW SYSTEM IS OPERATIONAL. CONTRACTOR IS RESPONSIBLE FOR POT–HOLING, LOCATING, CAREFULLY WORKING AROUND EXISTING LINES TO ENABLE WATERING BY DHGC STAFF. WHEN LINES ARE CUT OR INJURED CONTRACTOR IS REQUIRED TO REPAIR UNLESS ON THE HOLES BEING IMMEDIATELY INSTALLED.

2. CONTRACTOR WILL COMPLETELY REMOVE PAR–3 COURSE IRRIGATION PUMP, PAD, DISCHARGE AND ALL RELATED HARDWARE. CONTRACTOR TO EMPLOY LICENSED ELECTRICIAN TO DE–ENERGIZE AND REMOVE PUMP PANEL ACCORDING TO CITY AND NEC CODES.

3. EXISTING PIPELINES AND UTILITIES SHOWN ON THIS PLAN ARE APPROXIMATE ONLY FROM ORIGINAL 1976 AS–BUILTS FOR CHAMPIONSHIP COURSE. PAR 3 COURSE HAS NO AS–BUILTS. DHGC AND ARCHITECT CANNOT VERIFY ACCURACY OF ANY EXISTING AS–BUILTS.

4. DAMAGE TO EXISTING LINES, UTILITIES, WHETHER SHOWN OR NOT SHOWN, IS THE RESPONSIBILITY OF CONTRACTOR TO REPAIR UNLESS IMMEDIATELY BEING ABANDONED. CONTRACTOR MAY RUN ABOVE GROUND PIPE CONNECTIONS TO KEEP OLD SYSTEM ALIVE DURING INSTALL.

5. CANALS, LAKES, WATERWAYS, PIPELINES AND ALL OTHER WATERWORKS NOT UNDER JURISDICTION OF CITY OF YUMA MUST BE LEFT UNTOUCHED. IF CONTRACTOR IS REQUIRED TO CROSS SUCH FEATURES PERMITS MUST BE PROCURED BY CONTRACTOR.

6. PIPE CROSSINGS AT CART PATHS AND ROADS SHALL BE DONE BY DIRECTIONAL BORING. IF PANELS MUST BE REMOVED FOR ACCESS OR DUE TO DAMAGE CONTRACTOR IS REQUIRED TO USE 3500 PSI CONCRETE MEETING CITY AND COUNTY SPECIFICATIONS.

7. CONTRACTOR IS REQUIRED TO HAVE UTILITIES MARKED BY THE APPROPRIATE SERVICES FOR THE AREA (811 DIG ALERT) AND KEEP ALL PERMITS UP TO DATE FOR UTILITY MARKINGS.

APPROXIMATE EXISTING IRRIGATION MAIN LINES

APPROXIMATE EXISTING WATER LINES

APPROXIMATE EXISTING POWER WIRE ROUTING

N

SCALE 1" = 200'

0 50 100 200 400 600

CITY OF Yuma
City Hall, 1 City Plaza, Yuma AZ 85364 ph. (928) 373-5000

Gary Kaye Design & Project Management
3053 W. Owens Dr. Phoenix AZ 85086
(623) 341-2302 garykayedesign@gmail.com

Topographic & Existing Conditions Plan
Desert Hills Golf Irrigation Renovations

Owner: City of Yuma, Arizona

RFP#: 23–067
Drawn By: GSK
Approved: GSK
Date: 4/16/2023

REGISTERED LANDSCAPE ARCHITECT
CERTIFICATE NO. 64604
GARY S. KAYE
Date Signed
ARIZONA, U.S.A.

Date	Revisions	By

Sheet
IR-1
2 of 21

ORIGINAL SHEET SIZE ARCH D 24x36

C:\Users\HP\Desktop\LandscapeArchitect\2022_Yuma\Yuma_Basemap2.dwg, 4/23/2023 9:41:53 PM, _AutoCAD PDF (General Documentation).pc3

90% PLAN SET

NOT FOR CONSTRUCTION

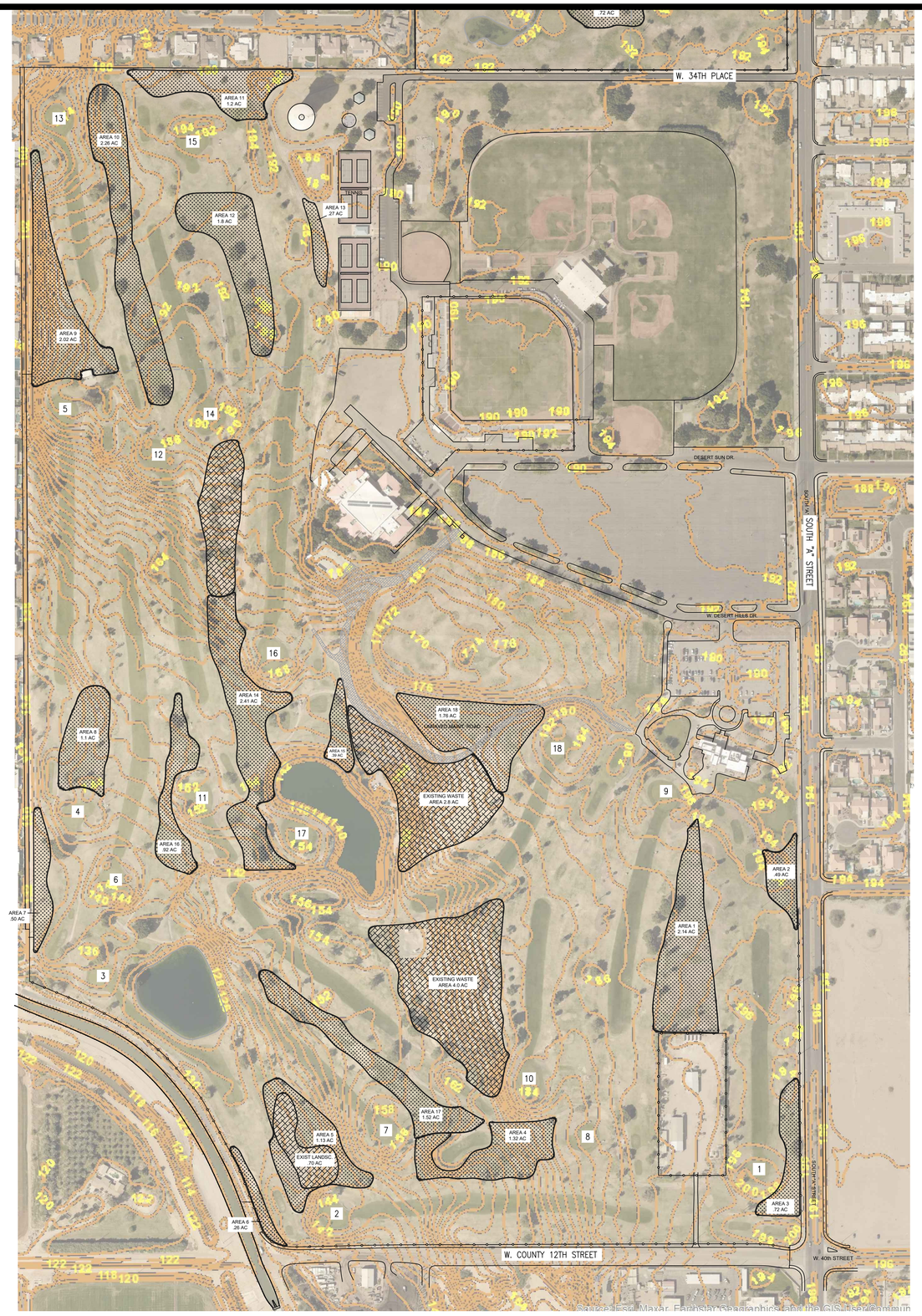

DESERT HILLS GOLF COURSE

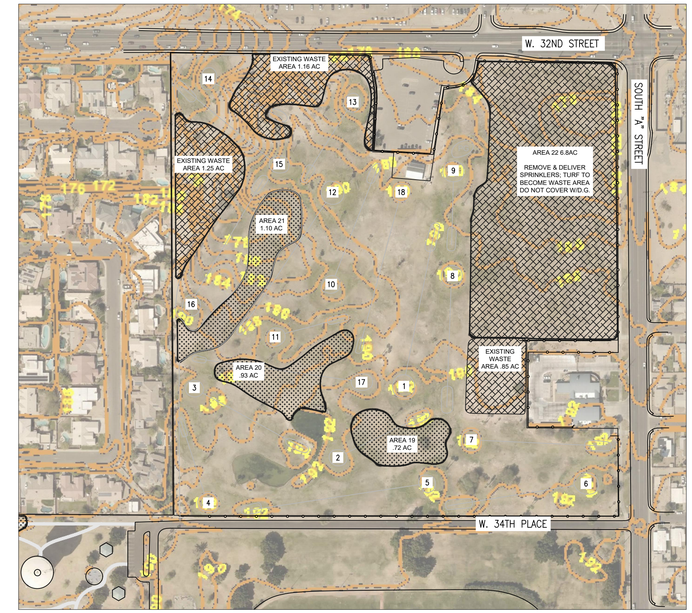

PAR 3 GOLF COURSE

EXISTING WASTE AREAS – NO CONTRACTOR WORK

IRRIGATED TURF AREAS CONVERT TO DESERT LANDSCAPE

TURF REDUCTION PLAN NOTES

1. DHGC STAFF AND CONTRACTOR WILL OUTLINE ALL AREAS IN WHITE PAINT APPROXIMATE TO THIS PLAN PRIOR TO TURF REMOVAL. CONTRACTOR WILL CUT SOD, MOVE TO WASTE AREAS, INSTALL DRIP VALVES AND STEEL EDGING.

2. WASTE AREAS SHALL REMAIN AS-IS NO WORK BY CONTRACTOR. CONTRACTOR MAY DEPOSIT OLD BUNKER SAND, SOD, ROCKS, EXCESS DIRT ONLY WITH PERMISSION OF DHGC. NO TRASH, OLD PVC PIPE, CONSTRUCTION MATERIALS OR DEBRIS WILL BE ALLOWED IN WASTE AREAS. CONTRACTOR IS REQUIRED TO HAUL ALL SUCH MATERIALS OFF SITE.

3. CONTRACTOR SHALL INSTALL DRIP VALVES SO THAT TREES ARE SEPARATED FROM SHRUBS, GOUND COVERS AND ALL OTHER PLANTS. CONTRACTOR SHALL MAKE (2) DRIP PROGRAMS ONE FOR TREES, OTHER SHRUBS, SET TO 90 MINUTES RUN TIME ONE CYCLE PER WEEK. DRIP VALVES IN TAN BOXES SHOULD BE INSTALLED INSIDE LANDSCAPE AREAS.

IRRIGATED ACRES CONVERTED TO DESERT LANDSCAPE		
AREA 1	BETWEEN 1 & 9	2.14
AREA 2	1TEE LEFT, PUTTING GREEN	0.49
AREA 3	1G LEFT, 2TEE	0.72
AREA 4	BETW. 8TEE & 8G	1.32
AREA 5	7G & 11FWY, 11G	1.13
AREA 6	3TEE LEFT, FENCE	0.26
AREA 7	4 TEE TO GREEN LEFT, FENCE	0.5
AREA 8	4G REAR, 5TEE RIGHT, 6 FWY	1.1
AREA 9	5G REAR, HOLE 13 LEFT, FENCE	2.02
AREA 10	BETW. 13 & 14	2.26
AREA 11	14TEE, 15G REAR, 16TEE	1.2
AREA 12	BETW. 15 & 16 FWY	1.8
AREA 13	16TEE LEFT ROUGH	0.27
AREA 14	BETW 12 & 16, 11G, 17	2.41
AREA 15	17TEE LEFT ROUGH	0.39
AREA 16	BETW. HOLE 6 & 11G	0.92
AREA 17	BETW. 7 & 11	1.52
AREA 18	BETW. DRIVING RANGE & 18G	1.76
AREA 19	PAR 3 HOLE 1, 5FWY LEFT	0.72
AREA 20	PAR 3 HOLE 17, 3, 11G	0.93
AREA 21	PAR 3 BETW. 13 & 16	1.1
AREA 22	PAR 3 OLD DRIVING RANGE, ROAD	6.82
	TOTAL CONVERSION ACRES	31.78

ACREAGE STATISTICS BOTH GOLF COURSES
190 AC. TOTAL AREA (NO PARKING LOTS OR ROADS)
165.8 AC. CURRENT APPRX. IRRIGATED GOLF TURF
134 AC. APPRX. IRRIGATED TURF AFTER REDUCTION

ACREAGE STATISTICS CHAMPIONSHIP COURSE
156 AC. TOTAL AREA (NO PARKING LOTS OR ROADS)
136.5 AC. CURRENT APPRX. IRRIGATED GOLF TURF
114.3 AC. APPRX. IRRIGATED TURF AFTER REDUCTION

ACREAGE STATISTICS PAR 3 COURSE
34 AC. TOTAL AREA (NO PARKING LOTS OR ROADS)
29.3 AC. CURRENT APPRX. IRRIGATED GOLF TURF
19.73 AC. APPRX. IRRIGATED TURF AFTER REDUCTION

TURF REDUCTION SUMMARY:
CHAMPIONSHIP REDUCTION = 22.21 AC.
PAR 3 COURSE REDUCTION = 9.57 AC.
TOTAL REDUCTION = 31.78 AC. (19%)
ANNUAL WATER SAVINGS = XXX Acre Feet

NOTE: Calculations are approximate with variance of 3%. Area data taken from City of Yuma GIS 2022 aerial photos. Contact landscape architect for more details on methodology.

SCALE 1" = 200'

0 50 100 200 400 600

CITY OF Yuma
City Hall, 1 City Plaza, Yuma AZ 85364 ph. (928) 373-5000

Gary Kaye Designs & Project Management
3053 W. Owens Dr. Phoenix AZ 85086
(623) 341-2302 garykayedesign@gmail.com

Proposed Turf Reduction Plan
Desert Hills Golf Irrigation Renovations

Owner: City of Yuma, Arizona

RFP#: 23-067
Drawn By: GSK
Approved: GSK
Date: 4/16/2023

REGISTERED LANDSCAPE ARCHITECT
CERTIFICATE NO. 64604
GARY S. KAYE
Date Signed
ARIZONA, U.S.A.

Date	Revisions	By

Sheet
IR-2
3 of 21

ORIGINAL SHEET SIZE: ARCH D 24x36

C:\Users\HP\Desktop\LandscapeArchitect\2022_Yuma\Yuma_Basemap2.dwg, 4/23/2023 9:41:58 PM, _AutoCAD PDF (General Documentation).pc3

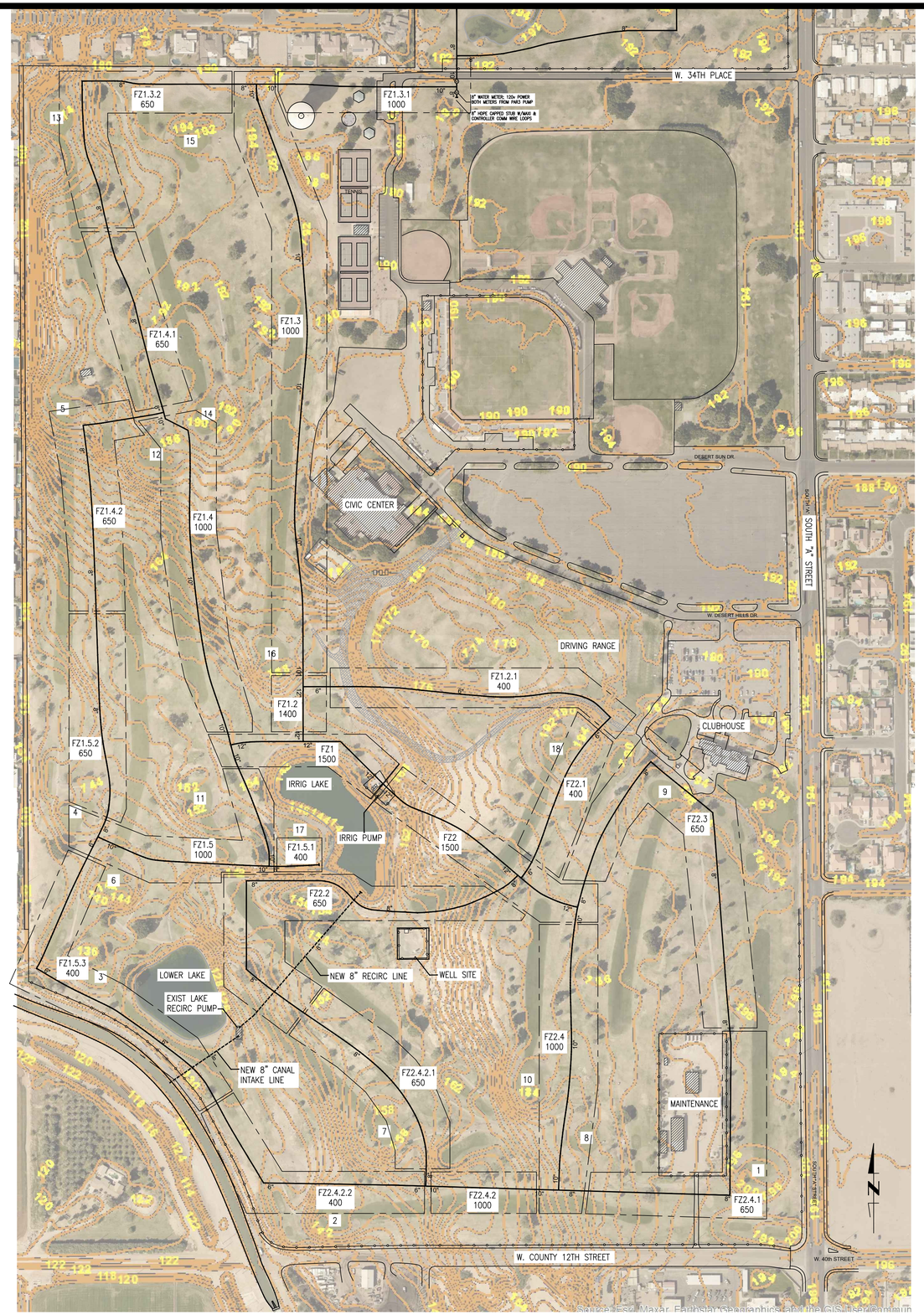

DESERT HILLS GOLF COURSE

SCALE 1" = 200'

0 50 100 200 400 600

PAR 3 GOLF COURSE

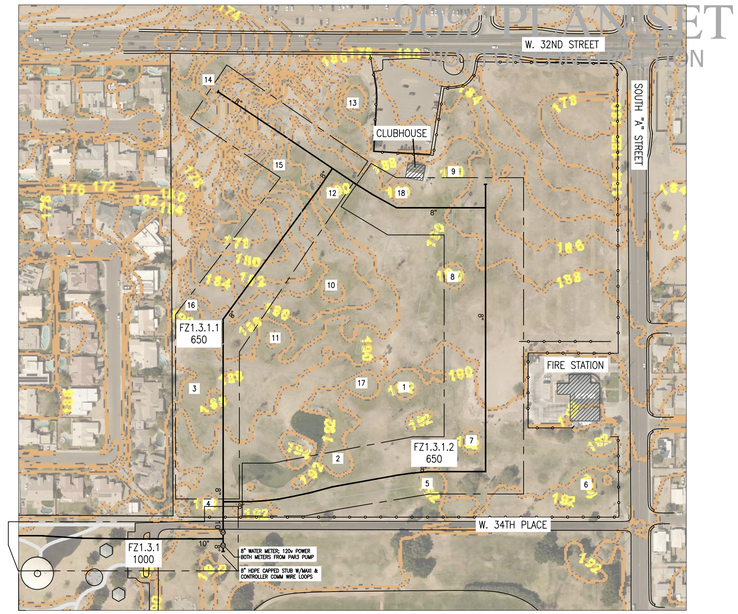

IRRIGATION FLOW ZONE LEGEND

NEW DR13.5 PE4710 BUTT FUSION IRRIGATION MAINLINES

NEW 8" DR13.5 PE4710 CANAL INTAKE, RECIRCULATION LINES (MAX 650gpm)

FLOW ZONE I.D. — FZ# — MAINLINE FLOW ZONE LIMIT

MAXIMUM FLOW — 1000

IRRIGATION SYSTEM HYDRAULIC TREE FOR CENTRAL COMPUTER PROGRAMMING

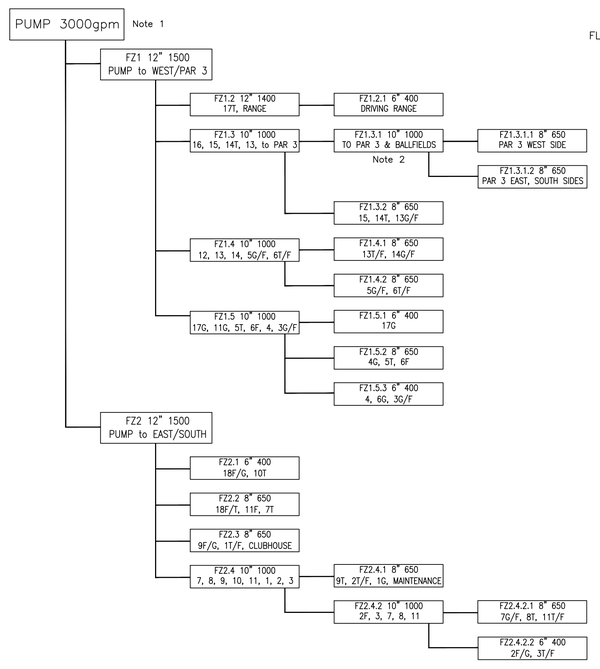

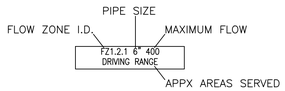

NOTE 1: EXIST PUMP RATED 8000gpm NOT REQUIRED FOR NORMAL WATERING WINDOW. LOWERING DESIGN FLOW TO 3000gpm SAVES POWER, MAINTENANCE COSTS.

NOTE 2: ADD BALLFIELDS HYDRAULIC LEG IN FUTURE IF TIE–IN PROJECT OCCURS. NEW FZ1.3.1.3 FOR 8" MAINLINE = 650gpm.

NOTE 3: HYDRAULIC TREE PROGRAMMING FOR HUNTER, R.B. AND TORO WILL HAVE SIMILAR STRUCTURE TO THIS CHART. MAXIMUM FLOWS SHALL BE AS FOLLOWS:

12" 1500gpm
10" 1000gpm
8" 650gpm
6" 400gpm
2" 120gpm LOOPED ZONE (2) VALVES
2" 60gpm DEAD END (1) VALVE

WATER USE & WATER WINDOW CALCULATIONS (MAX YUMA EVAPOTRANSPIRATION RATE .33"/HR)

TYPICAL SPACING 60' GREENS & 76' FAIRWAY/ROUGH TRIANGULAR — AVERAGE PRECIP RATE = .73"/hr — MAX CYCLE TIME ET .33" = 26min

PLAN QTY SPRINKLERS = 1600 — AVE HEAD FLOW = 32gpm — MAX WATER USE = 1,330,000gal — PUMP STATION MAX FLOW = 3000gpm

1,330,000gal/3000gpm = MAX WATER WINDOW (WW) = 7hrs 23min — AVE. WW 600,000gal/day = 3hrs 20min — ANNUAL WATER USE = 670ac.ft.

Note 1: Max WW assumes June, no rain, maximum daily temperatures. Average WW at 45% of maximum (600k/day) is a typical factor after renovations.

Note 2: Annual water use 670 acre feet divided by proposed reduced overall 134 irrigated acres = 5ac.ft. per acre which matches recent AZ standards.

CITY OF Yuma
City Hall, 1 City Plaza, Yuma AZ 85364 ph. (928) 373-5000

Gary Kaye Design & Project Management
3053 W. Owens Dr. Phoenix AZ 85086
(623) 341-2302 garykayedesign@gmail.com

Irrigation Flow Zones & Hydraulic Tree
Desert Hills Golf Irrigation Renovations

Owner: City of Yuma, Arizona

RFP#: 23–067
Drawn By: GSK
Approved: GSK
Date: 4/16/2023

REGISTERED LANDSCAPE ARCHITECT
CERTIFICATE NO. 64604
GARY S. KAYE
Date Signed
ARIZONA, U.S.A.

Date	Revisions	By

Sheet
IR-3
4 of 21

ORIGINAL SHEET SIZE ARCH D 24x36

C:\Users\HP\Desktop\LandscapeArchitect\2022_Yuma\Yuma_Basemap2.dwg, 4/23/2023 9:42:03 PM, _AutoCAD PDF (General Documentation).pc3

90% PLAN SET

NOT FOR CONSTRUCTION

IRRIGATION WEATHER STATION & NOTES

1. ALL WEATHER STATIONS SHALL BE POWERED WITH INTEGRAL SOLAR PANELS AS SPECIFIED WITH EACH MANUFACTURER.

2. HUNTER SYSTEM SHALL USE POGO+ WITH 40WATT SOLAR AND TURF PRO SOFTWARE.

3. RAIN BIRD WS-PRO2-SH-S TOWER, SOLAR PANEL, WITH SMART WEATHER MODULE FOR CIRRUS PRO.

4. TORO SYSTEM SHALL USE CAMPBELL SCIENTIFIC ET107 ETo WITH 10 WATT PANEL, WINDSONIC ETM2-D WIND SENSOR.

5. REMOVE OLD WEATHER STATION RETURN HARDWARE TO DHGC. CONTRACTOR MAY INSTALL NEW WS AT SAME LOCATION. MODIFY MOUNTING HARDWARE AS NECESSARY OR PROVIDE NEW PAD, ANCHORS AND BOLTS.

6. CONTRACTOR MAY USE EXISTING WS GROUNDING IF IT TESTS TO 10ohms OR LESS. IF GROUNDING DOES NOT MEET 10ohms THEN INSTALL NEW GROUND ROD, PLATE, UNTIL 10ohms IS ACHIEVED.

CITY OF Yuma
City Hall, 1 City Plaza, Yuma AZ 85364 ph. (928) 373-5000

Gary Kaye Design & Project Management
3053 W. Owens Dr. Phoenix AZ 85086
(623) 341-2302 garykayedesign@gmail.com

Irrigation Layout Holes 1-4, 6-11, 17 & 18
Desert Hills Golf Irrigation Renovations

Owner: City of Yuma, Arizona

RFP#: 23-067
Drawn By: GSK
Approved: GSK
Date: 4/16/2023

REGISTERED LANDSCAPE ARCHITECT
CERTIFICATE NO. 64604
GARY S. KAYE
Date Signed
ARIZONA, U.S.A.

Date	Revisions	By

Sheet
IR-4
5 of 21

ORIGINAL SHEET SIZE ARCH D 24x36

C:\Users\HP\Desktop\LandscapeArchitect\2022_Yuma\Yuma_Basemap2.dwg, 4/23/2023 9:42:08 PM, _AutoCAD PDF (General Documentation).pc3

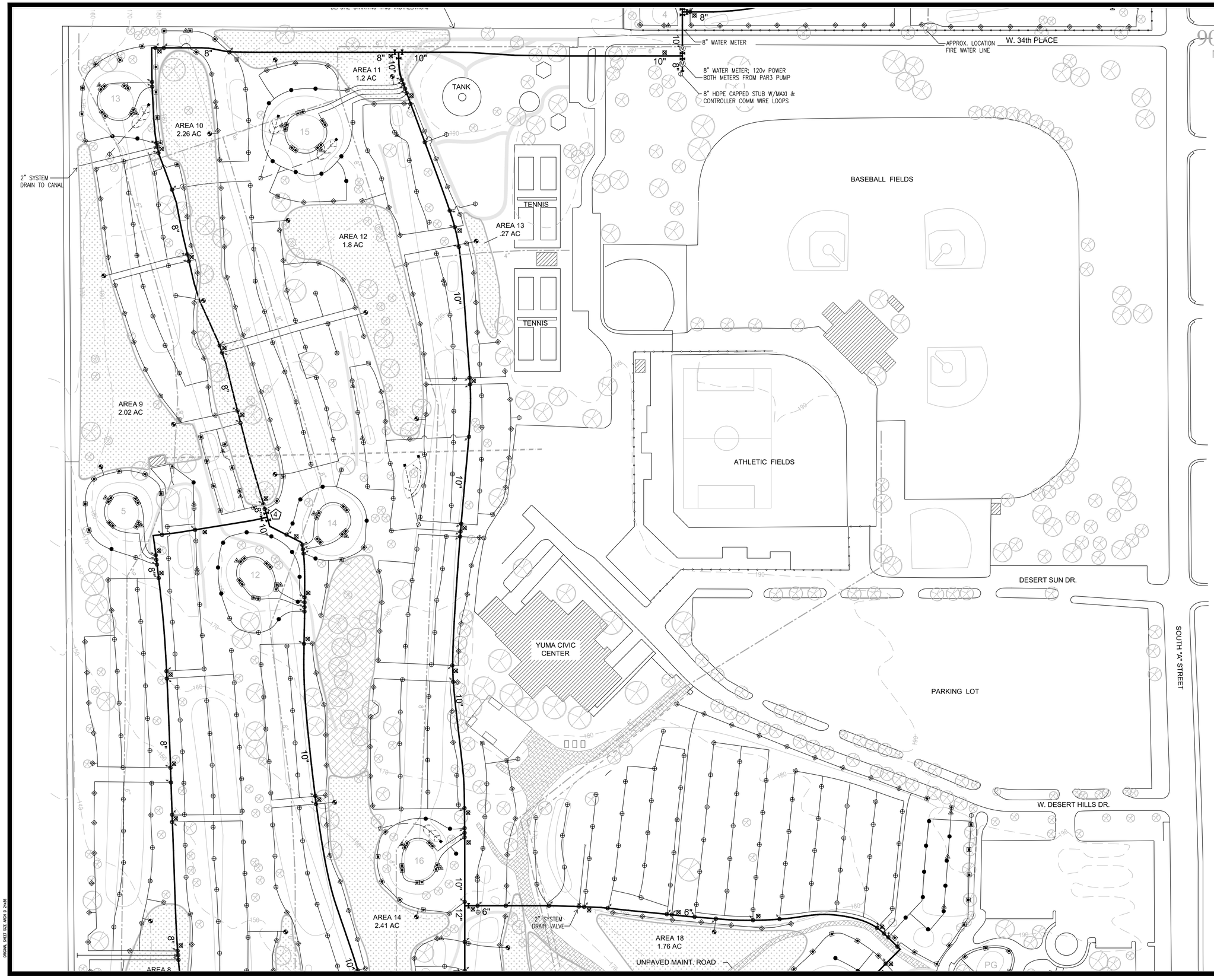

90% PLAN SET
NOT FOR CONSTRUCTION

SAND BUNKER SQUARE FOOTAGE

HOLE	(QTY. BUNKERS) GENERAL AREA	SQ.FT.
1	(1) GREEN RIGHT	1200
2	(3) GREEN RIGHT & LEFT	2005
3	(1) GREEN LEFT	1610
4	(1) GREEN RIGHT	910
5	NONE	0
6	(1) GREEN RIGHT	965
7	(1) GREEN LEFT	2610
8	(2) GREEN RIGHT & LEFT	2650
9	(2) GREEN RIGHT & LEFT (1) FAIRWAY LEFT	6170
10	(3) GREEN RIGHT & LEFT	3700
11	(1) GREEN RIGHT	1175
12	NONE	0
13	(1) GREEN RIGHT	1275
14	NONE	0
15	(2) GREEN RIGHT & LEFT	2250
16	(1) GREEN LEFT	1010
17	(1) FRONT OF GREEN	2345
18	(1) GREEN LEFT	1480
DR	(1) CHIPPING GREEN	380
	TOTAL BUNKER SQ. FEET	31735

NOTE: PAR 3 COURSE HAS NO BUNKERS.

CITY OF Yuma
City Hall, 1 City Plaza, Yuma AZ 85364 ph. (928) 373-5000

Gary Kaye Design & Project Management
3053 W. Owens Dr. Phoenix AZ 85086
(623) 341-2302 garykayedesign@gmail.com

Irrigation Layout Holes 5, 6T, 12-16, Range
Desert Hills Golf Irrigation Renovations

Owner: City of Yuma, Arizona

RFP#: 23-067
Drawn By: GSK
Approved: GSK
Date: 4/16/2023

REGISTERED LANDSCAPE ARCHITECT
CERTIFICATE NO. 64604
GARY S. KAYE
Date Signed
ARIZONA, U.S.A.

Date	Revisions	By

Sheet
IR-5
6 of 21

ORIGINAL SHEET SIZE ARCH D 24x36

C:\Users\HP\Desktop\LandscapeArchitect\2022_Yuma\Yuma_Basemap2.dwg, 4/23/2023 9:42:13 PM, _AutoCAD PDF (General Documentation).pc3

90% PLAN SET
NOT FOR CONSTRUCTION

LEGEND

- FULL CIRCLE SPRINKLER +/–80 FOOT RADIUS, 1.5" SWING JOINT, TWO–WIRE MODULE
- FULL CIRCLE SPRINKLER +/–63 FOOT RADIUS, 1.5" SWING JOINT, TWO–WIRE MODULE
- ADJ. PART CIRCLE SPRINKLER +/–80 FOOT RADIUS, 1.5" SWING JOINT, TWO–WIRE MODULE
- ADJ. PART CIRCLE SPRINKLER +/–65 FOOT RADIUS, 1.5" SWING JOINT, TWO–WIRE MODULE
- LANDSCAPE STUB–OUT 2" PIPE W/THREADED TRANS ADAPTER, BALL VALVE & WIRE LOOP
- 1" ELEC. DRIP VALVE W/FILTER & 40 PSI REGULATOR; TWO–WIRE MODULE
- 1" ONE–PIECE QUICK COUPLER W/1" SWING JOINT, BRASS OUTLET, SNAP–LOK STABILIZER
- 2" AQUAFUSE 360 DEGREE BUTT FUSE HDPE BALL VALVE OR APPROVED EQUAL
- 2" AQUAFUSE 360 DEGREE BUTT FUSE HDPE BALL VALVE OR APPROVED EQUAL; HORIZONTAL DRAIN VALVE
- 6"–12" CAST IRON MAINLINE GAVE VALVE W/HDPE BUTT FUSE ENDS
- BERMAD C–30 COMBINATION AIR/VACUUM RELIEF VALVE
- 6"–12" PE4710 DR13.5 HDPE BUTT FUSION MAINLINES
- 2" PE4710 DR13.5 HDPE LATERAL PIPE; 500' ROLLS
- APPROXIMATE LOCATION EXISTING MAINLINES
- NEW BUNKER DRAINAGE: 4" PERFORATED PIPE & PEA GRAVEL FRENCH DRAIN
- NEW BUNKER DRAINAGE: 4" SOLID HDPE RIBBED PIPE
- NEW BUNKER DRAINAGE: CLEANOUT W/4" CAP
- NEW GOLF COURSE PLASTIC CATCH BASIN W/GRAVEL SUMP BOTTOM
- (1) TORO & HUNTER SYSTEMS HUB SATELLITE (R.B. SYSTEM HAS NO SATELLITES)
- EXISTING WASTE AREAS – NO IRRIGATED TURF
- PROPOSED TURF CONVERSION TO DESERT LANDSCAPE

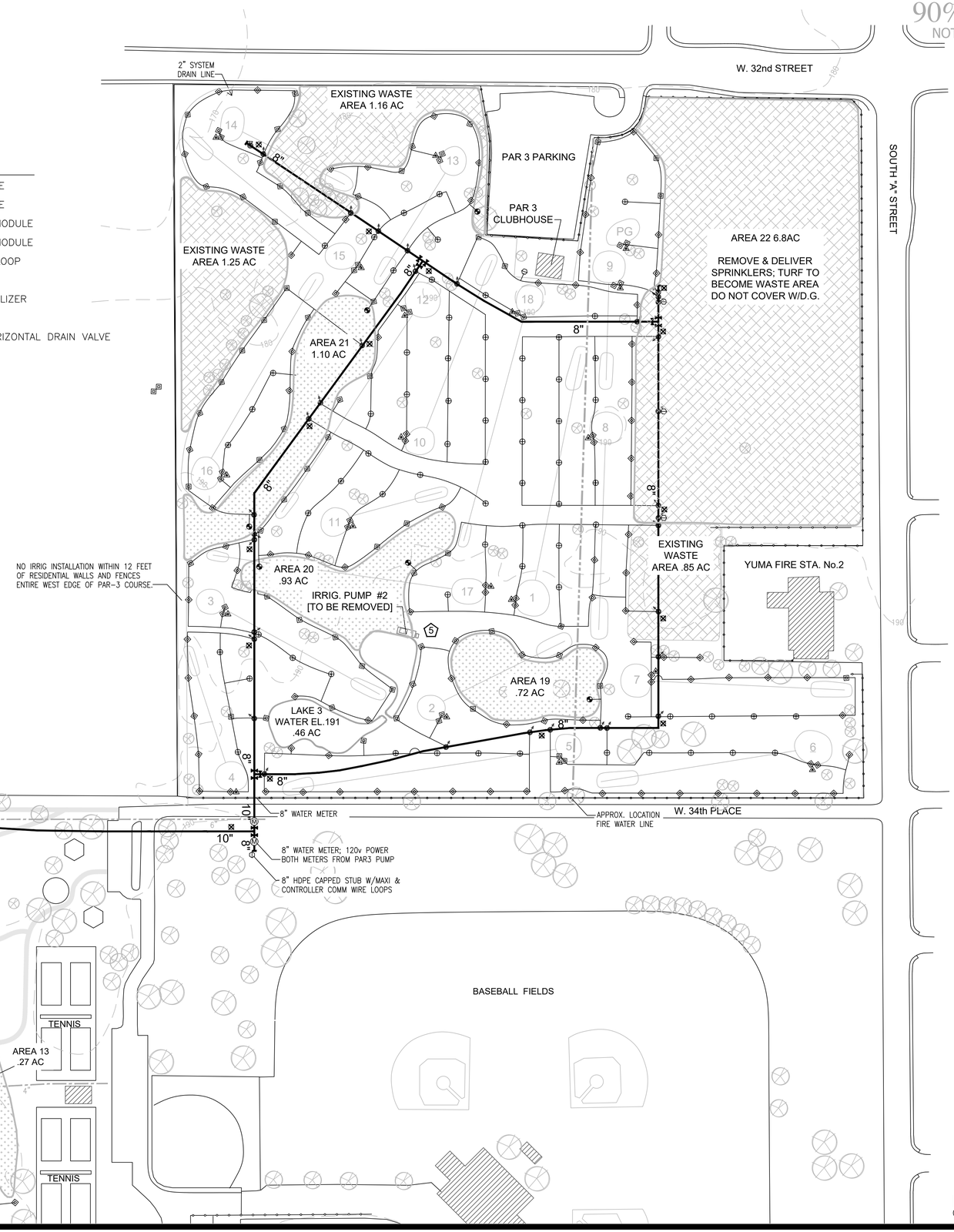

ORIGINAL SHEET SIZE: ARCH D 24x36

C:\Users\HP\Desktop\LandscapeArchitect\2022_Yuma\Yuma_Basemap2.dwg, 4/23/2023 9:42:18 PM, _AutoCAD PDF (General Documentation).pc3

CITY OF Yuma
City Hall, 1 City Plaza, Yuma AZ 85364 ph. (928) 373-5000

Gary Kaye Design & Project Management
3053 W. Owens Dr. Phoenix AZ 85086
(623) 341-2302 garykayedesign@gmail.com

Irrigation Layout Par 3 Course
Desert Hills Golf Irrigation Renovations

Owner: City of Yuma, Arizona

RFP#: 23–067
Drawn By: GSK
Approved: GSK
Date: 4/16/2023

REGISTERED LANDSCAPE ARCHITECT
CERTIFICATE NO. 64604
GARY S. KAYE
Date Signed
ARIZONA, U.S.A.

Date	Revisions	By

Sheet
IR-6
7 of 21

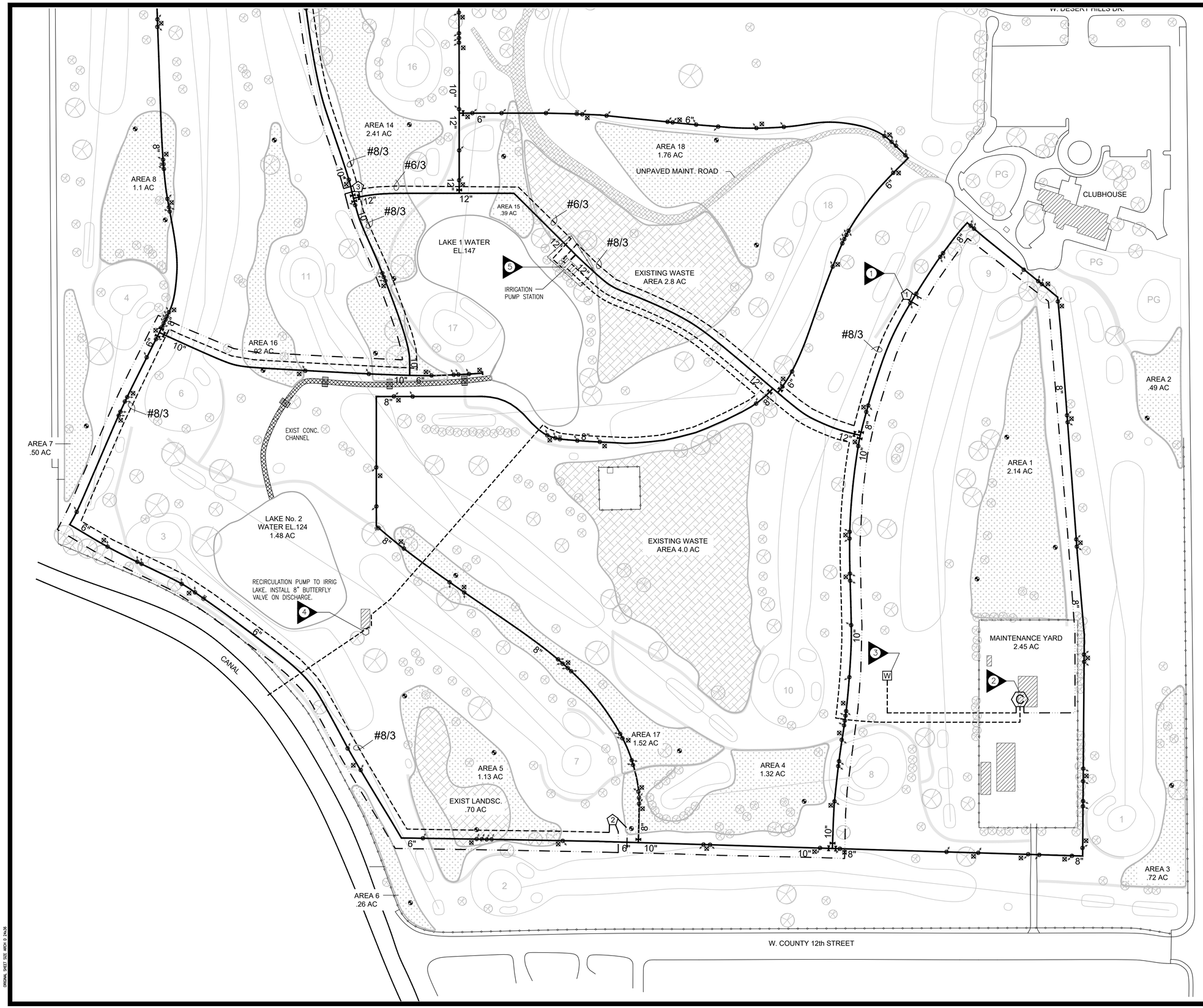

CONTRACTOR BID SHALL INCLUDE:

1. INSTALL (5) NEW HUNTER OR TORO PEDESTAL CONTROLLERS W/(4) COMM MODULES EACH. NEW GROUNDING, CONC PAD, HARDWARE REQUIRED. NOTE: RAIN BIRD SYSTEM HAS NO CONTROLLERS

2. PROVIDE AND INSTALL NEW HUNTER PILOT, TORO LYNX, OR RAIN BIRD CIRRUS CENTRAL COMPUTER, FIELD INTERFACE UNIT, RADIO CONTROL SYSTEM AND ALL RELATED HARDWARE. CONTRACTOR SHALL INSTALL GROUNDING GRID AND ANTENNA PER MANUF SPECIFICATIONS. PROVIDE ALL SPRINKLER FIELD DATA, BARCODES, INPUT INTO CENTRAL COMPUTER PER MANUF SPECS. ALL SPRINKLERS MUST WORK FROM CENTRAL COMPUTER BEFORE FINAL INSPECTION.

3. REMOVE OLD WEATHER STATION AND CONC PAD. INSTALL NEW HUNTER, TORO OR R.B. WEATHER STATION ON NEW CONC PAD. EXISTING GROUND ROD MAY BE RE-USED IF TESTING TO 10ohms OR LESS. PROVIDE NEW GROUNDING IF EXISTING GROUND ROD DOES NOT MEET 10ohms. RUN WEATHER COMM CABLE INTO MAINT OFFICE.

4. RUN MAXI OR HUNTER DECODER WIRE LOOP FROM NEAREST LATERAL LINE INTO 10" VALVE BOX NEAR RECIRC PUMP FOR FUTURE TIE-IN TO CENTRAL COMPUTER.

5. RUN TWO NEW CONTROLLER 120v POWER LEGS INTO EXISTING PUMP STATION POWER CENTER. RUN NEW PUMP COMM CABLE FROM PANEL INTO MAINT OFFICE AND CONNECT PER WATERTRONICS. REPLACE PANEL COMPONENTS AND SOFTWARE AS OUTLINED UNDER PUMP SCOPE OF WORK DETAIL 2 SHEET PS-1.

6. LOOP HUNTER OR TORO CONTROLLER COMM WIRE TO 8" STUB-OUT FOR FUTURE BALLFIELDS IRRIGATION SYSTEM PROVIDE 18" WIRE SLACK IN 10" V.B. BLACK LID. RUN MAXI OR DECODER WIRE LOOP INTO SEPARATE V.B. BLACK LID. NOTE: RAIN BIRD SYSTEM HAS NO CONTROLLER COMM WIRE. SEE SHEETS IR-8, IR-9.

7. INSTALL (2) 8" MAGNETIC FLOW METERS PER MANUF SPECIFICATIONS. RUN POWER LEG FROM CONTROLLER No.5 AT PAR3 COURSE.

8. REMOVE AND DISPOSE ENTIRE OLD PUMP STATION AT PAR3 LAKE INCLUDING CONC PAD. USE LICENSED ELECTRICIAN TO DECOMMISSION OLD PANEL PER CITY AND NEC CODES WHILE PROVIDING NEW PEDESTAL FOR 120v IRRIGATION CONTROLLER AND OTTERBINE LAKE AERATOR.

1 / IR7 IRRIGATION CONTROL SYSTEM WORK SCOPE

IRRIGATION WIRE & CONTROL LEGEND

- 120v DIRECT BURIAL TRAY CABLE
- TORO OR HUNTER CONTROLLER COMM CABLE
- WEATHER STATION & PUMP COMM CABLE
- HUNTER OR TORO CONTROL HUB (NO R.B.)
- SURGE MODULE, GROUND ROD & PLATE

IRRIGATION WIRE SPECIFICATIONS & NOTES

1. POWER TRAY CABLE SHALL BE RATED 600 VOLTS UL LISTED FOR DIRECT BURIAL CONTAINING (3) STRANDED COPPER CONDUCTORS, BLACK PVC INSULATION, CONTAINED IN PVC OUTER JACKET. PAIGE ELECTRIC #7267D OR APPROVED EQUAL.

2. TORO CONTROLLER COMM CABLE SHALL BE UL LISTED, DIRECT BURIAL W/(2) #16 STRANDED COPPER TINNED CONDUCTORS, YELLOW AND GRAY INSULATION, ALUMINUM BACKED POLYESTER SHIELDING, #16 DRAIN WIRE, HELICALLY WRAPPED 304 S.S. ARMOR, BLACK P.E. OUTER JACKET. PAIGE #7162D-A REV.9 OR APPROVED EQUAL.

3. HUNTER CONTROLLERS, WEATHER STATION, PUMP COMM CABLE SHALL BE THE SAME DIRECT BURIAL W/(2) #18 COPPER CONDUCTOR PAIRS, INSULATION RED, BLUE, BLACK AND ORANGE, ALUMINUM MYLAR TAPE W/#20 DRAIN WIRE, HELICALLY WRAPPED 304 S.S. ARMOR, BLACK P.E. OUTER JACKET. PAIGE #7171D-A OR EQUAL.

4. NOTE: RAIN BIRD SYSTEM NO CONTROLLERS OR CONTROLLER COMM CABLES. RAIN BIRD POWER AND COMM USES MAXI WIRE FROM CENTRAL COMPUTER ONLY. ELECTRIC AND COMM CABLE FOR CONTROLLERS SHOWN ON THIS PLAN ARE FOR TORO AND HUNTER SYSTEMS ONLY.

5. SPRINKLER COMM WIRE VARIES FOR EACH BRAND. SEE IRRIGATION DETAIL SHEETS IR-11, IR-12, IR-13 FOR SPECIFICATIONS.

90% PLAN SET
NOT FOR CONSTRUCTION

CITY OF Yuma
City Hall, 1 City Plaza, Yuma AZ 85364 ph. (928) 373-5000

Gary Kaye Design & Project Management
3053 W. Owens Dr. Phoenix AZ 85086
(623) 341-2302 garykayedesign@gmail.com

Wire & Control Holes 1-4, 6-11, 17 & 18
Desert Hills Golf Irrigation Renovations

Owner: City of Yuma, Arizona

RFP#: 23-067
Drawn By: GSK
Approved: GSK
Date: 4/16/2023

REGISTERED LANDSCAPE ARCHITECT
CERTIFICATE NO. 64604
GARY S. KAYE
Date Signed
ARIZONA, U.S.A.

Date	Revisions	By

Sheet
IR-7
8 of 21

ORIGINAL SHEET SIZE ARCH D 24x36

C:\Users\HP\Desktop\LandscapeArchitect\2022_Yuma\Yuma_Basemap2.dwg, 4/23/2023 9:42:23 PM, _AutoCAD PDF (General Documentation).pc3

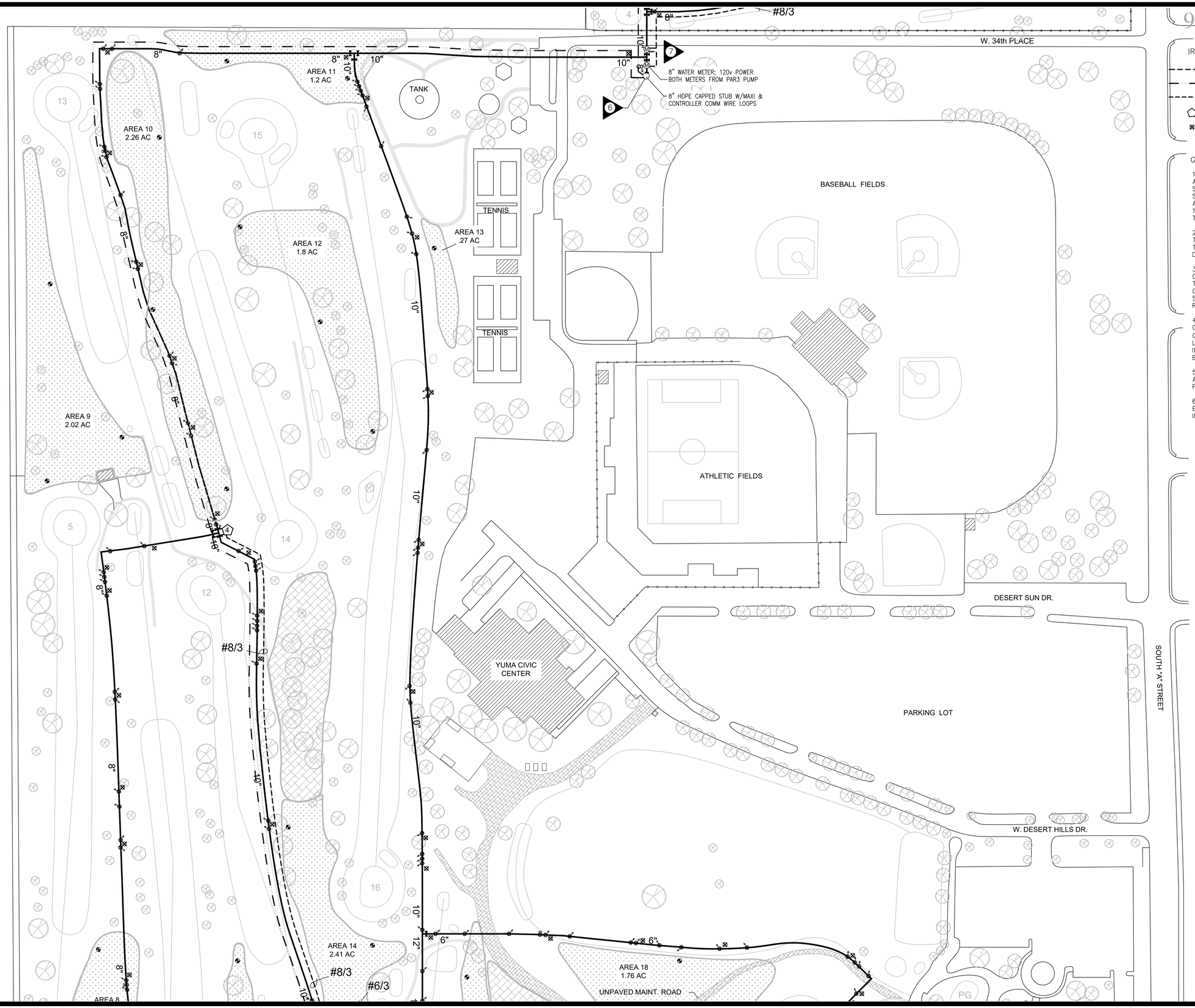

90% PLAN SET

NOT FOR CONSTRUCTION

IRRIGATION WIRE & CONTROL LEGEND

- 120v DIRECT BURIAL TRAY CABLE
- TORO OR HUNTER CONTROLLER COMM CABLE
- WEATHER STATION & PUMP COMM CABLE
- HUNTER OR TORO CONTROL HUB (NO R.B.)
- SURGE MODULE, GROUND ROD & PLATE

GROUNDING SPECIFICATIONS & NOTES

1. HUNTER, R.B. AND TORO SURGE MODULES AND GROUNDING SHALL BE INSTALLED IN STRICT ACCORDANCE WITH MANUFACTURER SPECIFICATIONS AND THESE PLANS. HUNTER AND TORO GROUNDING MUST TEST TO 10ohms OR LESS. R.B. GROUNDING MUST TEST TO 50ohms OR LESS.

2. CONTRACTOR SHALL CONDUCT GROUNDING TESTS OF ALL GROUND RODS AND PLATES BY THIRD PARTY PROVIDER AND CORRECT ANY DEFICIENCIES BEFORE FINAL INSPECTION.

3. LOCATIONS OF SURGE MODULES SHOWN ON PLANS IS APPROXIMATE AND DESIGNED TO PROTECT 10 TO 20 SPRINKLERS. CONTRACTOR SHALL ADJUST LOCATIONS OF SURGE MODULES AND ADD UNITS IF REQUIRED TO MEET FIELD CONDITIONS.

4. SURGE MODULES AND GROUNDING SHALL GENERALLY BE LOCATED ON MAINLINES AND CONTAINED IN 10" VALVE BOX WITH BLACK LID. SURGE MODULES PLACED OFF MAINLINES, IN FAIRWAYS, NEAR TEES AND GREENS SHALL BE MINIMIZED.

5. INSTALL SURGE MODULE WITH GROUNDING AT COMM CABLE ENDS AND STUB-OUT FOR FUTURE LOCATIONS.

6. SPRINKLER COMM WIRE VARIES FOR EACH BRAND. SEE IRRIGATION DETAIL SHEETS IR-11, IR-12, IR-13 FOR SPECIFICATIONS.

CITY OF Yuma
City Hall, 1 City Plaza, Yuma AZ 85364 ph. (928) 373-5000

Gary Kaye Design & Project Management
3053 W. Owens Dr. Phoenix AZ 85086
(623) 341-2302 garykayedesign@gmail.com

Wire & Control Holes 5, 6T, 12-16, Range
Desert Hills Golf Irrigation Renovations

Owner: City of Yuma, Arizona

RFP#: 23-067
Drawn By: GSK
Approved: GSK
Date: 4/16/2023

REGISTERED LANDSCAPE ARCHITECT
CERTIFICATE NO. 64604
GARY S. KAYE
Date Signed
ARIZONA, U.S.A.

Date	Revisions	By

Sheet
IR-8
9 of 21

ORIGINAL SHEET SIZE 22X34

C:\Users\HP\Desktop\LandscapeArchitect\2022_Yuma\Yuma_Basemap2.dwg, 4/23/2023 9:42:28 PM, _AutoCAD PDF (General Documentation).pc3

90% PLAN SET
NOT FOR CONSTRUCTION

HUNTER & TORO CONTROLLER OUTPUT MODULES

	MODULE – WIRE COLOR	AREAS OF CONTROL
1	1 – BLUE	1, 9G, 2TEE, PUTTING GREENS, CLUBHOUSE
	2 – RED	8G, 9TEE, 9F, 10, 18
	3 – YELLOW	DRIVING RANGE
	4 – SPARE	
2	1 – BLUE	2F, 2G, 3, 4TEE, 8TEE
	2 – RED	7F, 7G, 8TEE, 11TEE, 11F
	3 – SPARE	
	4 – SPARE	
3	1 – BLUE	4G, 5, 6, 7TEE, 11G, 17G
	2 – RED	12
	3 – YELLOW	16G, 16F, 17TEE
	4 – SPARE	
4	1 – BLUE	13, 14, 15, 16 TEE
	2 – SPARE	
	3 – SPARE	
	4 – SPARE	
5	1 – BLUE	PAR3 3, 4, 10 THROUGH 16
	2 – RED	PAR3 1, 2, 5 THROUGH 9
	3 – SPARE	
	4 – SPARE	

NOTES:

1. CHART APPLIES TO HUNTER AND TORO ONLY. RAIN BIRD SYSTEM HAS NO FIELD CONTROLLERS, HUBS, ALL STATIONS OPERATED DIRECTLY FROM R.B. CIRRUS COMPUTER.

2. HUNTER AND TORO MODULES HANDLE MAXIMUM 250 INDIVIDUAL STATIONS. EACH CONTROLLER HUB CONTAINS FOUR MODULES. EACH CONTROLLER HAS MAXIMUM CAPACITY 999 STATIONS.

3. COLORS REFER TO OUTER JACKET COLOR OF HUNTER DECODER COMM CABLE AND TORO MAXI CABLE. SEE SHEET IR–7 FOR DETAILS ON CABLE SPECIFICATIONS.

3. ALL HUNTER AND/OR TORO CONTROLLERS SHALL BE PROVIDED AND INSTALLED WITH (4) MODULES EACH. UNUSED MODULES SHALL BE USED BY DHGC STAFF AS SPARES.

4. EXACT LOCATIONS OF NEW CONTROLLERS SHALL BE DETERMINED BY DHGC STAFF AND MAY VARY SLIGHTLY FROM LOCATIONS SHOWN ON THESE PLANS.

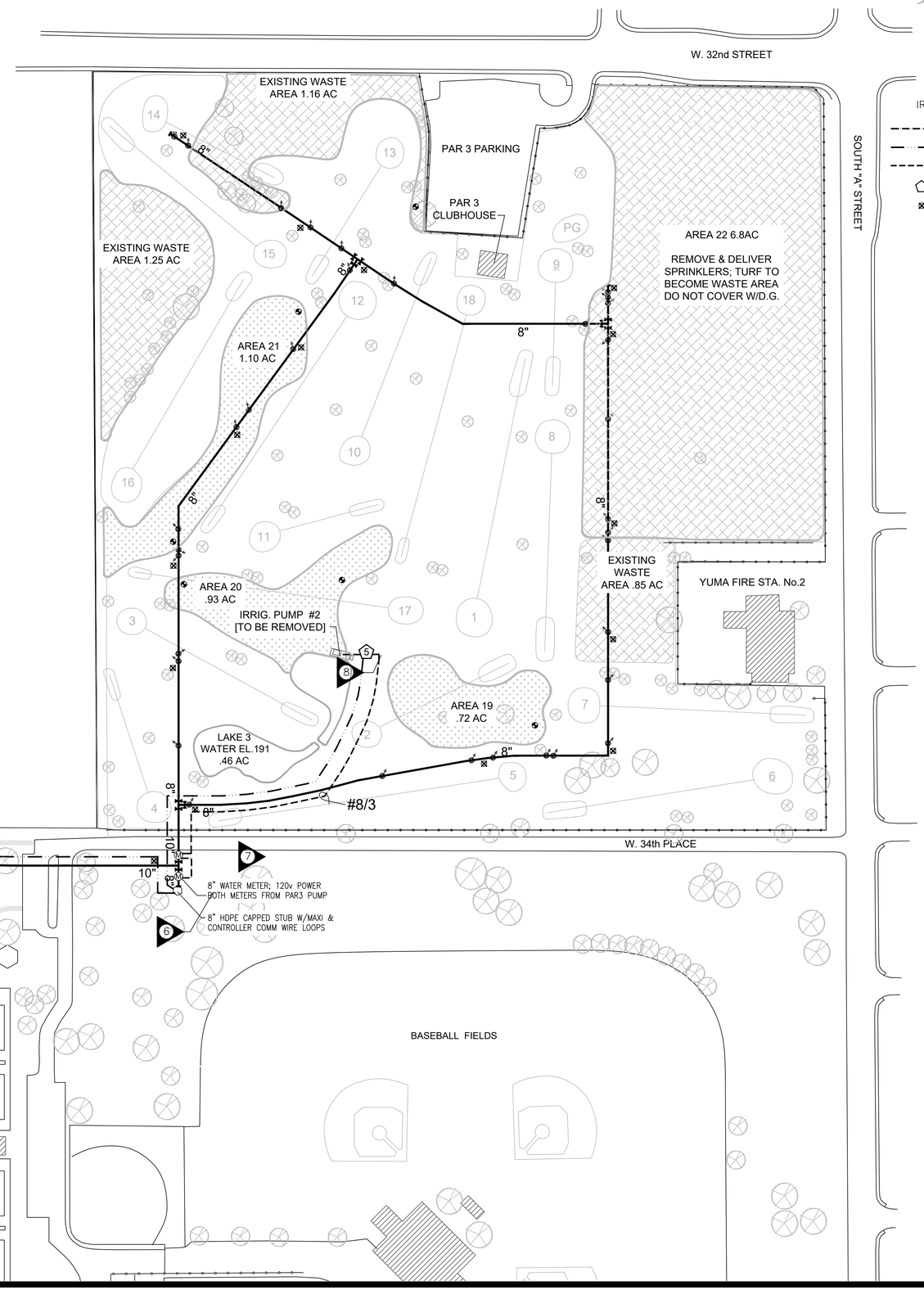

IRRIGATION WIRE & CONTROL LEGEND

- 120v DIRECT BURIAL TRAY CABLE
- TORO OR HUNTER CONTROLLER COMM CABLE
- WEATHER STATION & PUMP COMM CABLE
- HUNTER OR TORO CONTROL HUB (NO R.B.)
- SURGE MODULE, GROUND ROD & PLATE

CITY OF Yuma
City Hall, 1 City Plaza, Yuma AZ 85364 ph. (928) 373-5000

Gary Kaye Design & Project Management
3053 W. Owens Dr. Phoenix AZ 85086
(623) 341-2302 gsr.kayedesign@gmail.com

Wire & Control Par 3 Course Desert Hills Golf Irrigation Renovations

Owner: City of Yuma, Arizona

RFP#: 23–067
Drawn By: GSK
Approved: GSK
Date: 4/16/2023

REGISTERED LANDSCAPE ARCHITECT CERTIFICATE NO. 64604 GARY S. KAYE Date Signed ARIZONA, U.S.A.

Date	Revisions	By

Sheet
IR-9
10 of 21

ORIGINAL SHEET SIZE ARCH D 24x36

C:\Users\HP\Desktop\LandscapeArchitect\2022_Yuma\Yuma_Basemap2.dwg, 4/23/2023 9:42:33 PM, _AutoCAD PDF (General Documentation).pc3

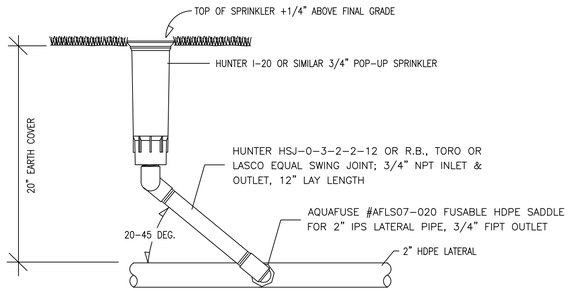

NOTE: SPRINKLERS ARE SHIPPED WITH MULTIPLE NOZZLES. CONTRACTOR SHALL INSTALL NOZZLES MEETING SITE CONDITIONS AND AS DIRECTED BY ARCHITECT AND/OR PHGC.

1 / IR10 TYPICAL POP-UP SPRINKLER & SWING JOINT ASSEMBLY

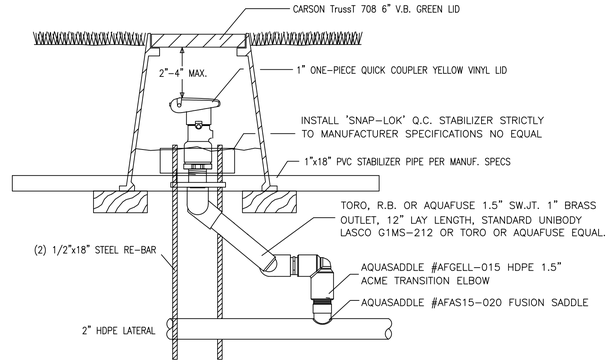

2 / IR10 1" QUICK COUPLER WITH 'SNAP-LOK' STABILIZER

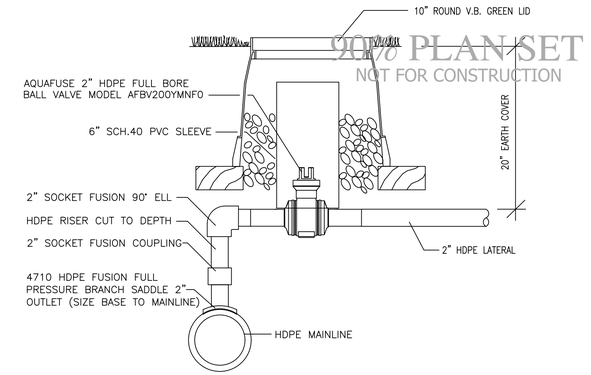

90% PLAN SET
NOT FOR CONSTRUCTION

6 / IR10 HDPE MAINLINE TO LATERAL LINE CONNECTION W/BALL VALVE

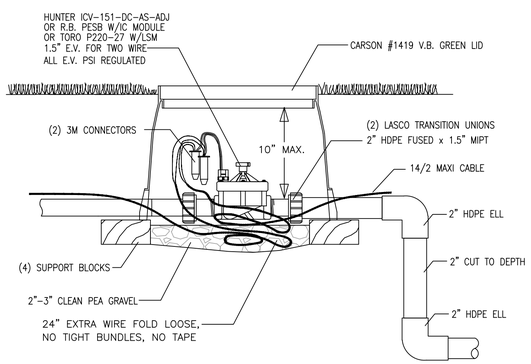

4 / IR10 IRRIGATION ELECTRIC VALVES ALL BRANDS (EXCEPT DRIP IRRIGATION)

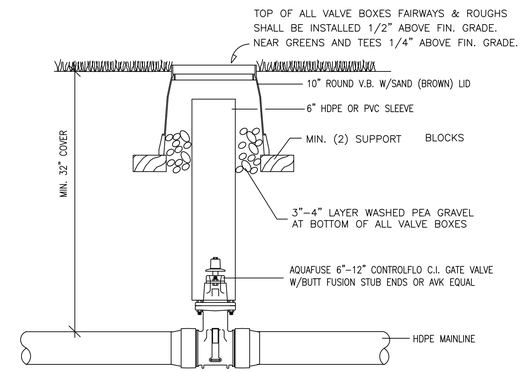

5 / IR10 HDPE MAIN LINE GATE VALVES AND VALVE BOX DETAILS

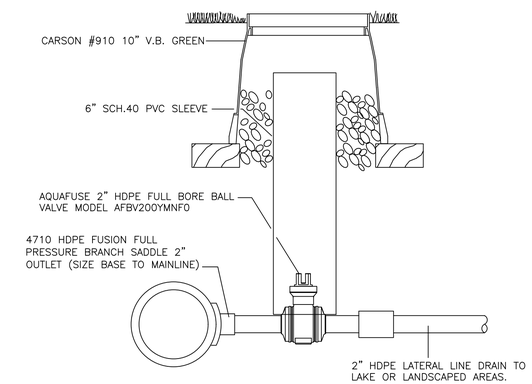

6 / IR10 HDPE MAINLINE DRAIN VALVE DETAIL

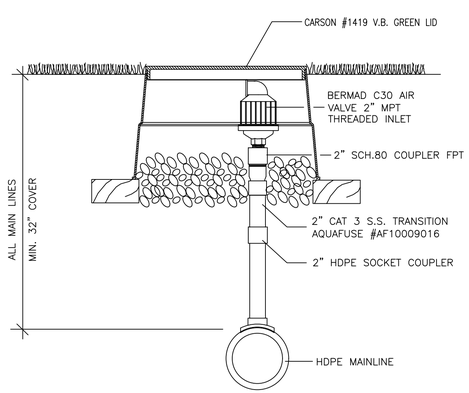

7 / IR10 COMBINATION AIR RELIEF / VACUUM VALVE ASSEMBLY

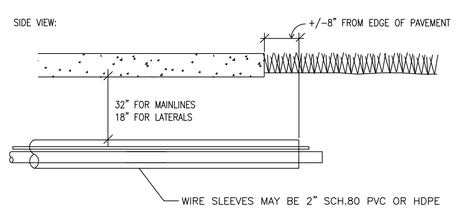

NOTES:
1. WIRE SLEEVES REQ'D UNDER ALL PAVED SURFACES. HDPE PIPE DOES NOT REQUIRE SLEEVES
2. BORINGS PREFERRED. OPEN TRENCH MUST COMPACT TO 100% BEFORE NEW CART PATH POURED.
3. POWER CABLE SHALL BE IN SEPARATE CONDUIT FROM MAXI WIRE OR OTHER COMM CABLES.
4. CHECK NMSS SPECIFICATIONS BEFORE INSTALLING PIPE OR SLEEVES UNDER ROADWAYS.
5. CONTRACTOR SHALL NOT EXCEED CAPACITY OR VOID % ACCORDING TO NEC SPECIFICATIONS.

8 / IR10 SLEEVES UNDER PAVEMENT

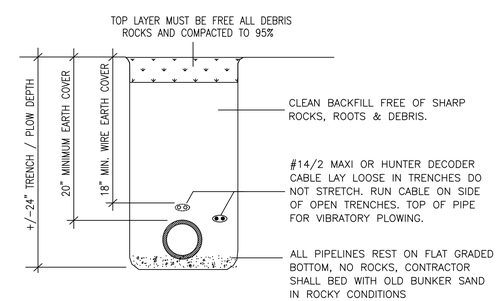

NOTE: SOD CUTTING REQUIRED IN MAINTAINED TURF AREAS. CONTRACTOR SHALL PUT SOD BACK WITHIN 24 HOURS AND WATER FOR (3) DAYS.

9 / IR10 LATERAL LINE TRENCH DETAIL (APPLICABLE TO ALL SPRINKLER BRANDS)

ORIGINAL SHEET SIZE ARCH D 24x36

CITY OF Yuma
City Hall, 1 City Plaza, Yuma AZ 85364 ph. (928) 373-5000

Gary Kaye Design & Project Management
3053 W. Owens Dr. Phoenix AZ 85086
(623) 341-2302 garykayedesign@gmail.com

Irrigation Installation Details
Desert Hills Golf Irrigation Renovations

Owner: City of Yuma, Arizona

RFP#: 23-067
Drawn By: GSK
Approved: GSK
Date: 4/16/2023

REGISTERED LANDSCAPE ARCHITECT CERTIFICATE NO. 64604 GARY S. KAYE Date Signed ARIZONA, U.S.A.

Date	Revisions	By

Sheet
IR-10
11 of 21

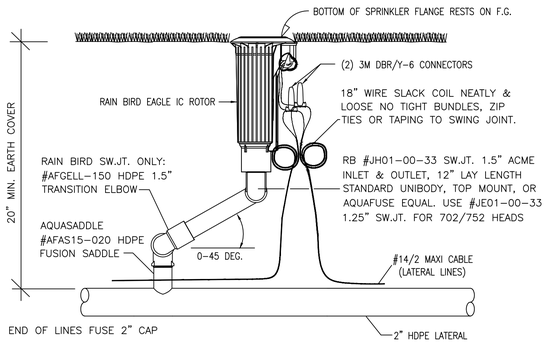

1 / IR11 RAIN BIRD IC GOLF ROTOR ON HDPE LATERAL LINE

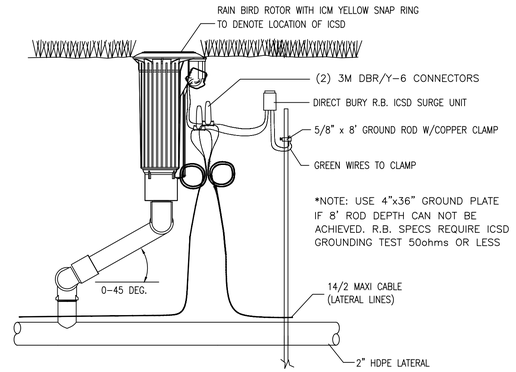

2 / IR11 RAIN BIRD ICSD SURGE UNIT INSTALLATION AT SPRINKLER HEADS

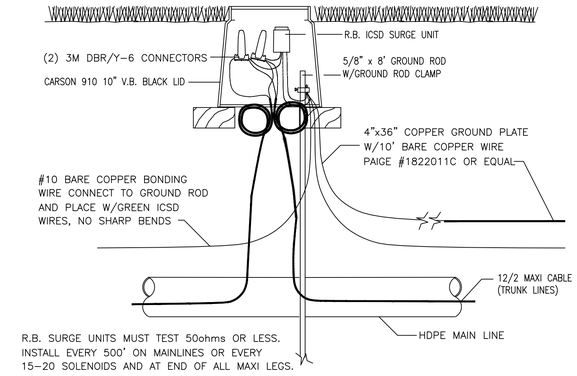

3 / IR11 RAIN BIRD ICSD SURGE UNIT INSTALLATION AT MAINLINES

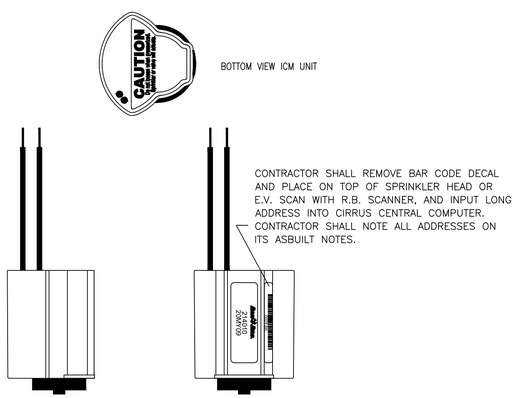

4 / IR11 RAIN BIRD IC MODULE DETAILS

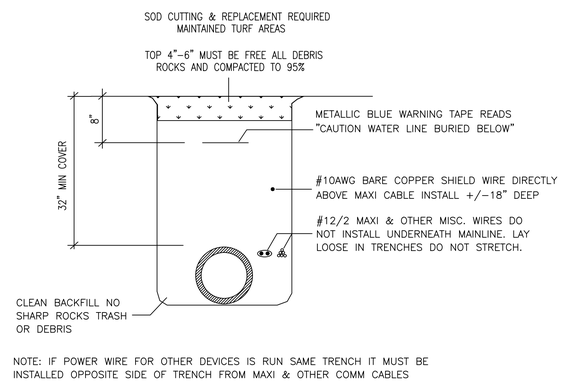

5 / IR11 RAIN BIRD SYSTEM MAIN LINE TRENCH DETAIL

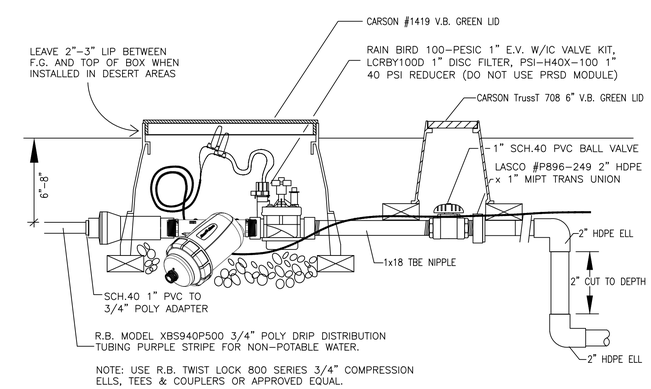

6 / IR11 RAIN BIRD 1" DRIP VALVE ASSEMBLY

90% PLAN SET
NOT FOR CONSTRUCTION

7 / IR11 RESERVED FOR FUTURE USE

8 / IR11 RESERVED FOR FUTURE USE

9 / IR11 RESERVED FOR FUTURE USE

ORIGINAL SHEET SIZE ARCH D 24x36

CITY OF Yuma
City Hall, 1 City Plaza, Yuma AZ 85364 ph. (928) 373-5000

Gary Kaye Design & Project Management
3053 W. Owens Dr. Phoenix AZ 85086
(623) 341-2302 garykayedesign@gmail.com

Rain Bird IC System Details
Desert Hills Golf Irrigation Renovations

Owner: City of Yuma, Arizona

RFP#: 23-067
Drawn By: GSK
Approved: GSK
Date: 4/16/2023

REGISTERED LANDSCAPE ARCHITECT
CERTIFICATE NO. 64604
GARY S. KAYE
Date Signed
ARIZONA, U.S.A.

Date	Revisions	By

Sheet
IR-11
12 of 21

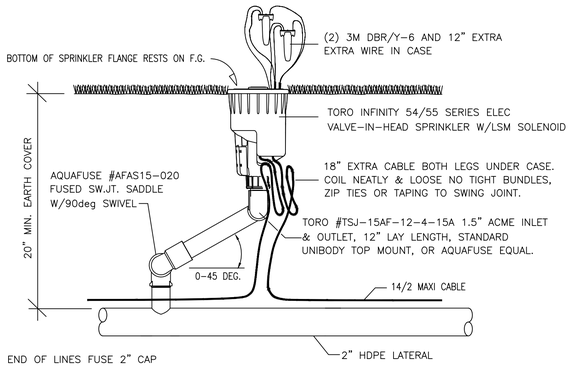

1 IR12 TORO INF54/55 SERIES LSM MODULE SPRINKLER & SWING JOINT

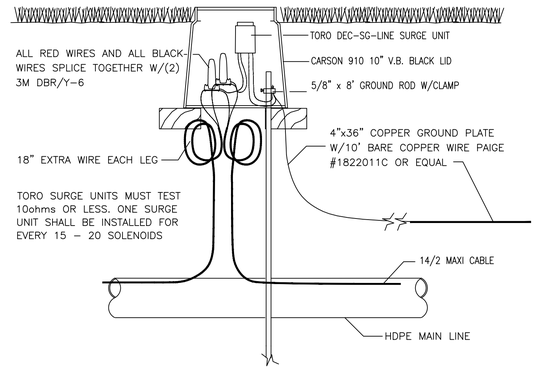

2 IR12 TORO SURGE UNIT INSTALLATION AT MAINLINES

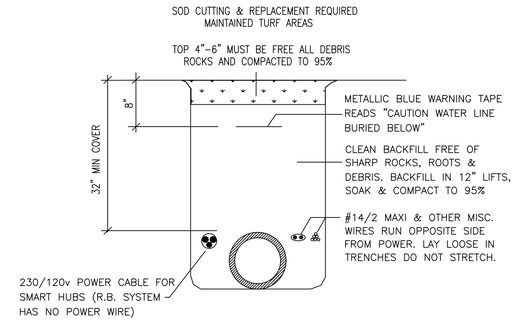

3 IR12 TORO SYSTEM MAIN LINE TRENCH DETAIL

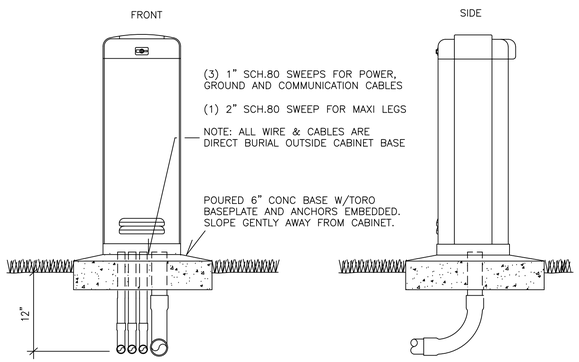

4 IR12 TORO LYNX SMART HUB

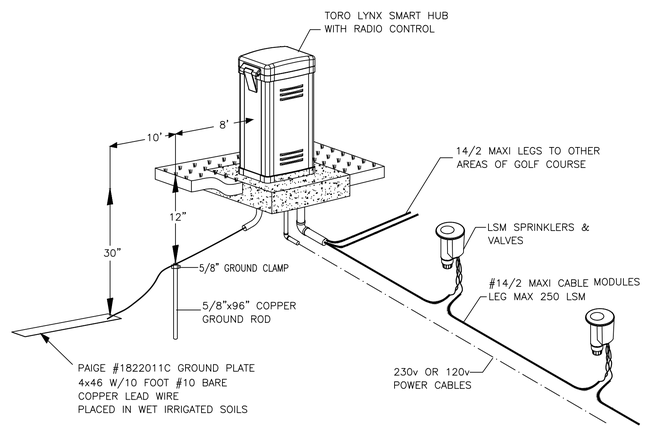

5 IR12 TORO LYNX SMART HUB GROUNDING & MAXI CABLE DIAGRAM

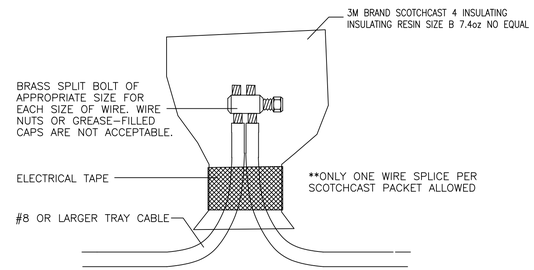

6 IR12 230v/120v DIRECT BURIAL POWER WIRE SPLICE

90% PLAN SET
NOT FOR CONSTRUCTION

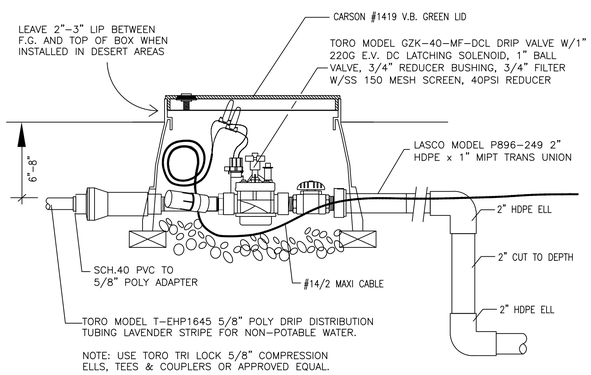

7 IR12 TORO 1" DRIP VALVE ASSEMBLY

8 IR12 RESERVE FOR FUTURE USE

9 IR12 RESERVE FOR FUTURE USE

ORIGINAL SHEET SIZE ARCH D 24x36

CITY OF Yuma
City Hall, 1 City Plaza, Yuma AZ 85364 ph. (928) 373-5000

Gary Kaye Design & Project Management
3053 W. Owens Dr. Phoenix AZ 85086
(623) 341-2302 garykayedesign@gmail.com

Toro Lynx Two-Wire System Details
Desert Hills Golf Irrigation Renovations

Owner: City of Yuma, Arizona

RFP#: 23-067
Drawn By: GSK
Approved: GSK
Date: 4/16/2023

REGISTERED LANDSCAPE ARCHITECT
CERTIFICATE NO. 64604
GARY S. KAYE
Date Signed
ARIZONA, U.S.A.

Date	Revisions	By

Sheet
IR-12
13 of 21

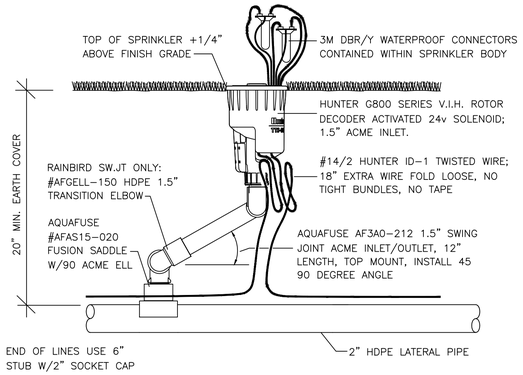

1 IR13 HUNTER G800 SPRINKLER & SWING JOINT

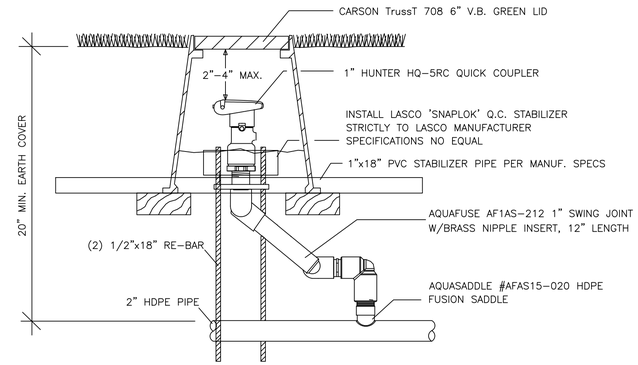

2 IR13 HUNTER 1" QUICK COUPLER & SWING JOINT

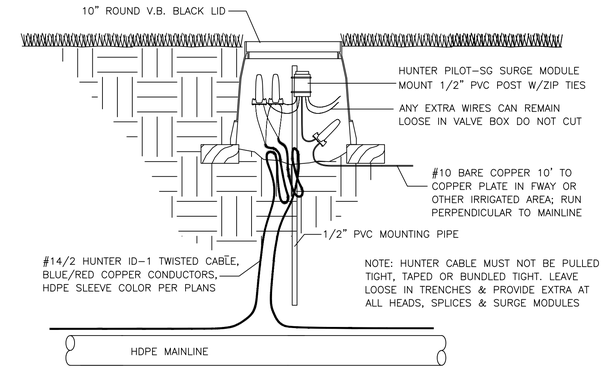

3 IR13 HUNTER PILOT-SG SURGE MODULE

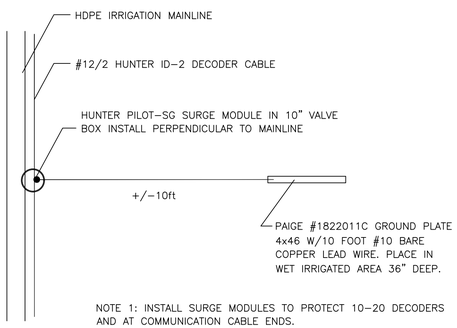

NOTE 1: INSTALL SURGE MODULES TO PROTECT 10-20 DECODERS AND AT COMMUNICATION CABLE ENDS.

NOTE 2: MAINLINES RUN #12/2 ID-2 CABLE; RUN #14/2 ID-1 IN LATERAL LINES TO HEADS.

4 IR13 HUNTER DECODER WIRE GROUNDING DIAGRAM – PLAN VIEW

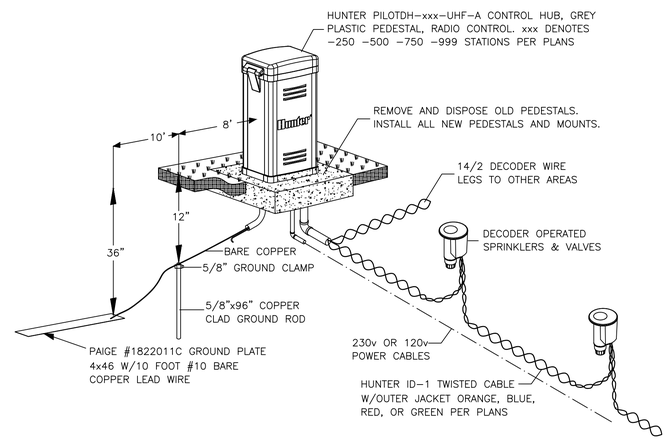

5 IR13 HUNTER PILOTDH-xxx-UHF-A CONTROL HUB WIRE & GROUNDING DIAGRAM

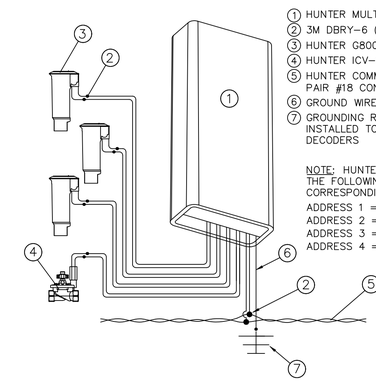

1. HUNTER MULTICHANNEL DECODER
2. 3M DBRY-6 (2 PER HEAD OR VALVE)
3. HUNTER G800 SERIES V.I.H. SPRINKLER
4. HUNTER ICV-201-AS SERIES E.V.
5. HUNTER COMM WIRE PATH (1) TWISTED PAIR #18 CONDUCTORS
6. GROUND WIRE, CLAMP TO GROUND ROD
7. GROUNDING RODS AND PLATES INSTALLED TO PROTECT 15 TO 20 DECODERS

NOTE: HUNTER DECODERS SHALL HAVE THE FOLLOWING ADDRESSES AND CORRESPONDING COLOR:

ADDRESS 1 = BLACK
ADDRESS 2 = YELLOW
ADDRESS 3 = GREEN
ADDRESS 4 = WHITE

6 IR13 MULTICHANNEL DECODER WIRE DIAGRAM (HUNTER PILOT400 SHOWN)

90% PLAN SET
NOT FOR CONSTRUCTION

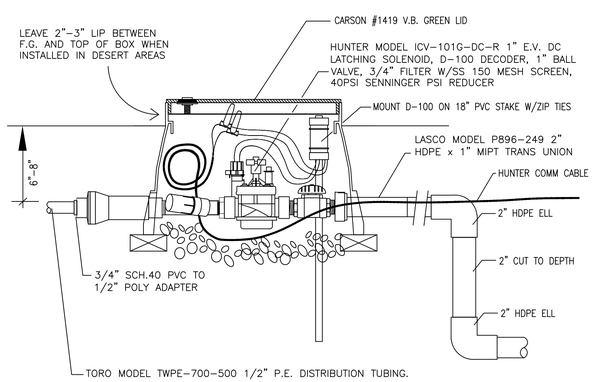

NOTE: USE HUNTER LOC COMPRESSION ELLS, TEES & COUPLERS OR APPROVED EQUAL.

7 IR13 HUNTER 1" DRIP VALVE ASSEMBLY

8 IR13 RESERVED FOR FUTURE USE

9 IR13 RESERVED FOR FUTURE USE

ORIGINAL SHEET SIZE: ARCH D 24x36

C:\Users\HP\Desktop\LandscapeArchitect\2022_Yuma\Yuma_Basemap2.dwg, 4/23/2023 9:42:53 PM, _AutoCAD PDF (General Documentation).pc3

CITY OF Yuma
City Hall, 1 City Plaza, Yuma AZ 85364 ph. (928) 373-5000

Gary Kaye Design & Project Management
3053 W. Owens Dr. Phoenix AZ 85086
(623) 341-2302 garykayedesign@gmail.com

Hunter 2-Wire System Details
Desert Hills Golf Irrigation Renovations

Owner: City of Yuma, Arizona

RFP#: 23-067
Drawn By: GSK
Approved: GSK
Date: 4/16/2023

REGISTERED LANDSCAPE ARCHITECT
CERTIFICATE NO. 64604
GARY S. KAYE
Date Signed
ARIZONA, U.S.A.

Date	Revisions	By

Sheet
IR-13
14 of 21

1 IR14 RESERVED FOR FUTURE USE

2 IR14 RESERVED FOR FUTURE USE

3 IR14 RESERVED FOR FUTURE USE

4 IR14 RESERVED FOR FUTURE USE

5 IR14 RESRVED FOR FUTURE USE

6 IR14 RESERVED FOR FUTURE USE

90% PLAN SET
NOT FOR CONSTRUCTION

7 IR14 HUNTER 1" DRIP VALVE ASSEMBLY

8 IR14 RESERVED FOR FUTURE USE

9 IR14 RESERVED FOR FUTURE USE

ORIGINAL SHEET SIZE ARCH D 24x36

CITY OF Yuma
City Hall, 1 City Plaza, Yuma AZ 85364 ph. (928) 373-5000

Gary Kaye Design & Project Management
3053 W. Owens Dr. Phoenix AZ 85086
(623) 341-2302 garykayedesign@gmail.com

Miscellaneous Installation Details
Desert Hills Golf Irrigation Renovations

Owner: City of Yuma, Arizona

RFP#: 23-067
Drawn By: GSK
Approved: GSK
Date: 4/16/2023

REGISTERED LANDSCAPE ARCHITECT
CERTIFICATE NO. 64604
GARY S. KAYE
Date Signed
ARIZONA, U.S.A.

Date	Revisions	By

Sheet
IR-14
15 of 21

C:\Users\HP\Desktop\LandscapeArchitect\2022_Yuma\Yuma_Basemap2.dwg, 4/23/2023 9:42:58 PM, _AutoCAD PDF (General Documentation).pc3

90% PLAN SET
NOT FOR CONSTRUCTION

BUNKER DRAINAGE LEGEND

— — — 4" SOLID HDPE DRAIN PIPE

- - - - - - - - - - 4" PERFORATED PIPE 'FRENCH DRAIN' W/GRAVEL

■ DRAINLINE CLEANOUT W/CAP

⊠ 12" NDS DRAIN BASIN/SUMP

BUNKER DRAINAGE & RENOVATION NOTES

1. CONTRACTOR SHALL REMOVE AND TRANSPORT BUNKER SAND TO WASTE AREAS AS DIRECTED BY DHGC SUPERINTENDENT.

2. BUNKER SUBGRADE AND DRAINAGE SHALL BE INSPECTED BY CITY REPRESENTATIVE BEFORE BUNKER LINER AND SAND REINSTALLED.

3. ALL REPLACEMENT SAND MUST BE SOURCED FROM CITY APPROVED VENDOR. SAMPLES SHALL BE TAKEN THROUGHOUT PROJECT FOR LAB TESTING. ANY NON-SPEC SAND SHALL BE REPLACED AT CONTRACTOR EXPENSE.

LANDSCAPE LEGEND

WASTE AREAS NO CONTRACTOR WORK

IRRIGATED TURF CONVERT TO DESERT LANDSCAPE

LANDSCAPE NOTES

1. DHGC STAFF AND CONTRACTOR WILL OUTLINE TURF CONVERSION AREAS IN WHITE PAINT APPROXIMATE TO THIS PLAN PRIOR TO TURF REMOVAL. CONTRACTOR WILL CUT SOD, MOVE TO WASTE AREAS, INSTALL STEEL EDGING PER DETAILS, BACKFILL AND COMPACT.

2. LANDSCAPE. WASTE AREAS SHOWN ON THIS PLAN SHALL REMAIN AS-IS NO WORK BY CONTRACTOR.

3. CONTRACTOR SHALL INSTALL 1" DRIP VALVES INSIDE LANDSCAPED AREAS IN TAN VALVE BOX. TREE ZONES SHALL BE SEPARATED FROM SHRUB ZONES. CACTUS RECEIVE NO IRRIGATION.

4. EXISTING PLANTS AND TREES WITHIN TURF CONVERSION AREAS SHALL BE PRESERVED IN PLACE WITH NEW DRIP EMITTERS RUN TO EACH PER DETAILS FOR EACH MANUFACTURER.

5. STEEL LANDSCAPE BORDER SHALL INCLUDE EXPANSION JOINT PER DETAIL X.XX EVERY 100'.

6. CONTRACTOR SHALL TRIM AND FIT STEEL BORDER TO CART PATHS, CONCRETE CHANNEL, AND OTHER HARD SURFACES TO MATCH FIN GRADE. BORDER STEEL MUST NOT BE INSTALLED ABOVE HARD SURFACE GRADE.

7. NEW GOLF COURSE IRRIGATION SHALL BE INSTALLED WITH NEW SPRINKLER HEADS 6" CLEARANCE FROM NEW LANDSCAPE BORDERS.

8. STEEL BORDER CORNERS AND OTHER SHARP ANGLES SHALL BE WELDED JOINTS.

9. PAINT ALL STEEL BORDERS BOTH SIDES AND TOP WITH (2) COATS PRIMER (1) COAT PAINT W/24 HOURS DRYING BEFORE BACKFILLING.

CITY OF Yuma
City Hall, 1 City Plaza, Yuma AZ 85364 ph. (928) 373-5000

Gary Kaye Design & Project Management
3053 W. Owens Dr. Phoenix AZ 85086
(623) 341-2302 garykayedesign@gmail.com

Bunker Drainage & Landscape Plan I
Desert Hills Golf Irrigation Renovations
Owner: City of Yuma, Arizona

RFP#: 23-067
Drawn By: GSK
Approved: GSK
Date: 4/16/2023

REGISTERED LANDSCAPE ARCHITECT
CERTIFICATE NO. 64604
GARY S. KAYE
Date Signed
ARIZONA, U.S.A.

Date	Revisions	By

Sheet
LS-1
16 of 21

ORIGINAL SHEET SIZE ARCH D 24x36

C:\Users\HP\Desktop\LandscapeArchitect\2022_Yuma\Yuma_Basemap2.dwg, 4/23/2023 9:43:03 PM, _AutoCAD PDF (General Documentation).pc3

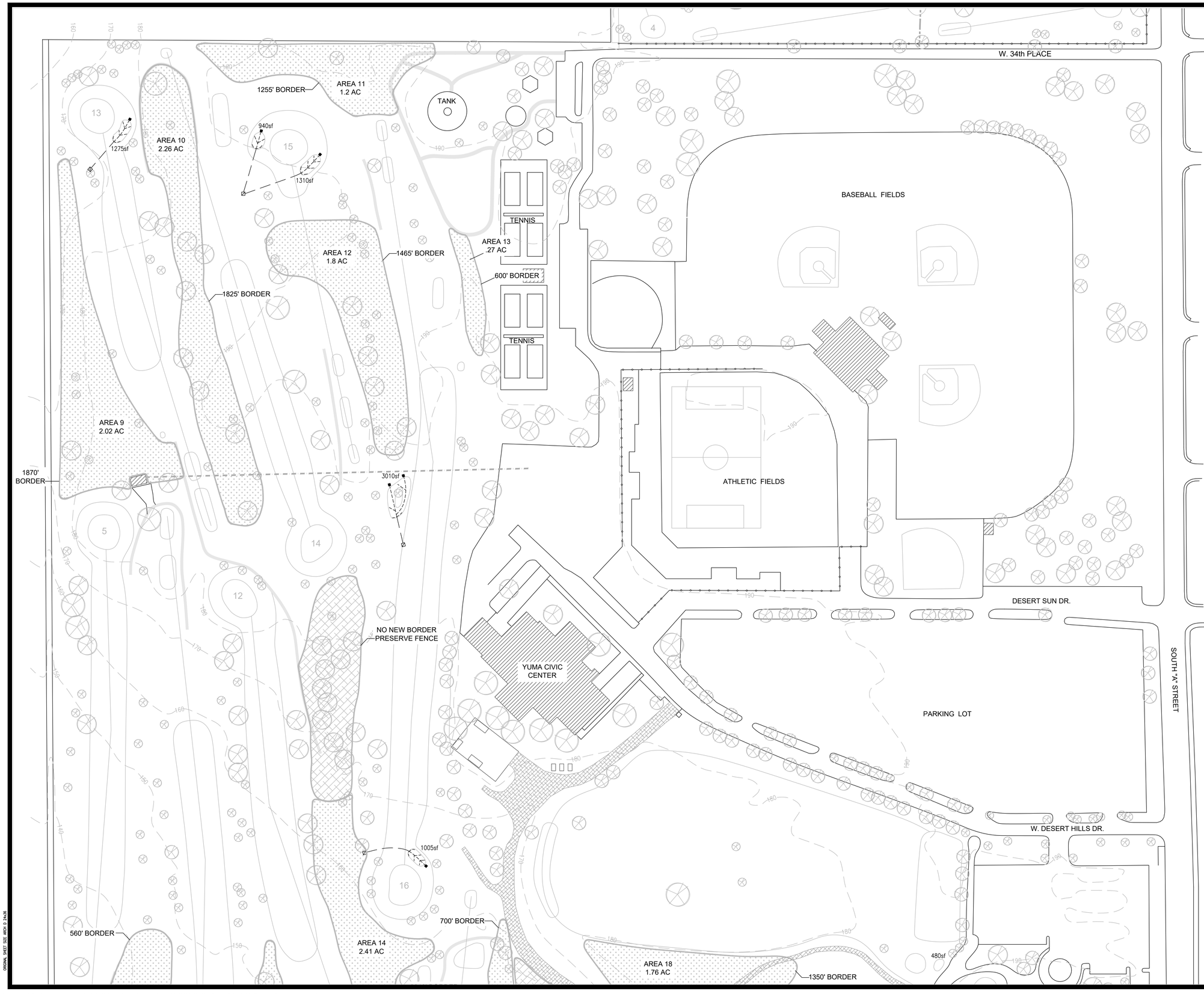

90% PLAN SET
NOT FOR CONSTRUCTION

BUNKER DRAINAGE LEGEND

— — — 4" SOLID HDPE DRAIN PIPE

- - - - - - - - - - 4" PERFORATED PIPE 'FRENCH DRAIN' W/GRAVEL

■ DRAINLINE CLEANOUT W/CAP

⊠ 12" NDS DRAIN BASIN/SUMP

LANDSCAPE LEGEND

WASTE AREAS NO CONTRACTOR WORK

IRRIGATED TURF CONVERT TO DESERT LANDSCAPE

LANDSCAPE BORDER LINEAL FEET

Area#	General Location	Lineal Feet
1	9 RIGHT	900
2	1TEE LEFT, CHIP GREEN	660
3	1G LEFT	985
4	2 RIGHT, 8	1200
5	2GRN, 3TEE, 7 RIGHT	1040
6	3TEE LEFT	790
7	4 LEFT	1010
8	4GRN, 5TEE, 6	560
9	5GRN, 13 LEFT	1870
10	13 RIGHT, 14 RIGHT	1825
11	14TEE, 15GRN, 16TEE	1255
12	15 RIGHT, 16 RIGHT	1465
13	16TEE LEFT	600
14	11, 12, 16, 17	2210
15	17TEE LEFT	700
16	11, 12, 6 LEFT	1400
17	7 LEFT, 11 LEFT	1635
18	18GRN, D.R. LEFT	1480
Waste1	18FWY LEFT	460
Waste2	10, 11, 18	1625
19	PAR 3 No.2, 5, 7G	765
20	PAR 3 No.3, 11, 17	1080
21	PAR 3 No.12, 16, 17TEE	1355
22	PAR 3 No.8, 9 RIGHT	750
Waste3	PAR 3 No.15, 16 LEFT	640
Waste4	PAR 3 No.13, 14, 15	1055
	TOTAL SQ. FT.	29315

N

SCALE 1" = 100'

0 25 50 100 200 300

CITY OF Yuma
City Hall, 1 City Plaza, Yuma AZ 85364 ph. (928) 373-5000

Gary Kaye Design & Project Management
3053 W. Owens Dr. Phoenix AZ 85086
(623) 341-2302 garykayedesign@gmail.com

Bunker Drainage & Landscape Plan II
Desert Hills Golf Irrigation Renovations

Owner: City of Yuma, Arizona

RFP#: 23-067
Drawn By: GSK
Approved: GSK
Date: 4/16/2023

REGISTERED LANDSCAPE ARCHITECT
CERTIFICATE NO. 64604
GARY S. KAYE
Date Signed
ARIZONA, U.S.A.

Date	Revisions	By

Sheet
LS-2
17 of 21

ORIGINAL SHEET SIZE: ARCH D 24x36

C:\Users\HP\Desktop\LandscapeArchitect\2022_Yuma\Yuma_Basemap2.dwg, 4/23/2023 9:43:08 PM, _AutoCAD PDF (General Documentation).pc3

BUNKER RENOVATION NOTES

1. REMOVE AND MOVE EXISTING BUNKER SAND TO LOCATIONS AS DIRECTED BY DHGC SUPERINTENDENT.
2. CLEAN UP, FINE GRADE AND PLATE COMPACT SUBGRADE BEFORE INSTALLING NEW DRAINAGE.
3. CREATE SUMP OR 'SMILE' PIPE AT LOW POINTS OF EACH BUNKER WHERE WATER EXITS AS SHOWN.
4. INSTALL #14 SOLID COPPER CORE TRACER WIRE IN TRENCH WITH DRAINAGE MAINLINE. LEAVE 12" EXTRA WIRE UNDER FLUSHOUT CAP AND AT END OF LINE FOR WIRE TRACKING.
5. CUT SOD AROUND ALL BUNKER EDGES MIN. 18". BRING NEW BUNKER LINER UP OVER LIP SECURE WITH SOD STAPLES. REPLACE SOD WITHIN 36 HOURS AND HAND WATER THOROUGHLY FOR (7) DAYS.
6. CONTRACTOR SHALL SUBMIT 50lb BUNKER SAND AND PEA GRAVEL SAMPLES WITH LAB ANALYSIS FOR APPROVAL PRIOR TO BUNKER RENOVATIONS START. ALL MATERIALS MUST MEET USGA SPECIFICATIONS.
7. PEA GRAVEL AND BUNKER SAND SHALL BE SAMPLED RANDOMLY BY CITY DURING PROJECT FOR LAB ANALYSIS. ANY MATERIALS NOT MEETING SPEC SHALL BE REMOVED AND REPLACED BY CONTRACTOR.
8. CONTRACTOR SHALL INSTALL NEW SAND 6" DEEP, WET, PLATE COMPACT OR TIRE COMPACT WITH SAND PRO, THEN TOPDRESS TO ACHIEVE EVEN 6" DEPTH NEW SAND LAYER IN ALL BUNKERS.
9. FINISH GRADE, RAKE ALL BUNKERS, REPLACE ANY DEAD OR DYING SOD, PRIOR TO INITIAL INSPECTION BY DHGC SUPERINTENDENT. ONCE BUNKERS ARE APPROVED CONTRACTOR MAY CALL FOR FINAL INSPECTION.
10. SAND DEPTH SHALL BE MEASURED BY PROBE APPX 30 DAYS AFTER INSTALL. CONTRACTOR MAY BE REQUIRED TO ADD ADDITIONAL SAND BEFORE FINAL INSPECTION.

BUNKER LINER NOTES

1. CONTRACTOR SHALL INCLUDE 75% SANDTRAPPER I AND 25% SANDTRAPPER II BUNKER LINER IN ITS BID.
2. SANDTRAPPER II IS TO BE USED ON STEEP FACES 45deg AND GREATER. FOLLOW ALL MANUFACTURER INSTALLATION INSTRUCTIONS.
3. OTHER LINER METHODS SUCH AS BETTER BILLY BUNKER, CAPILLARY CONCRETE OR OTHER BUNKER CLOTH MAY BE PROPOSED AS AN ALTERNATE. FOR PURPOSES OF BIDDING USE SANDTRAPPER I AND II PRODUCTS.

BUNKER SAND SPECIFICATIONS

PARTICLE	SIZE (mm)	SIEVE	% BY WEIGHT
GRAVEL	> 2.0	No. 10	< 2%
VERY COARSE SAND	1.0 – 2.0	No. 18	< 15%
COARSE SAND	.50 – 1.0	No. 35	78 – 100%
MEDIUM SAND	.25 – .50	No. 60	78 – 100%
FINE SAND	.10 – .25	No. 140	78 – 100%
VERY FINE SAND	.05 – .10	No. 270	< 5%
SILT OR CLAY	< .05	N/A	< 3%

APPX 78% OF PARTICLES SHOULD BE .1 TO 1.0mm SIZE. SAND PARTICLE SHAPE SHALL BE ANGULAR TO SUB-ANGULAR WITH MEDIUM TO LOW SPHERICITY. COLOR SHALL BE TYPICAL OF THE REGION AND APPROVED BY PHGC BEFORE INSTALL. CONTRACTOR SHALL USE U.S.G.A. GREEN SECTION RECORD VOL. 58 ISSUE 11 DATED JUNE 5, 2020 "GUIDE TO SELECTING BUNKER SAND" AS A REFERENCE.

PEA GRAVEL SPECIFICATIONS

SIZE (mm)	% BY WEIGHT
12	90–100%
2	< 10%
1	< 5%

100% SHOULD PASS 12mm SCREEN. PEA GRAVEL SHALL BE CLEAN THOROUGHLY WASHED AT PLANT AND DELIVERED WITH NO VISIBLE DIRT CLODS OR SILT. LIMESTONE, SANDSTONE OR SHALE PEA GRAVEL IS GENERALLY NOT ACCEPTABLE AND SHALL BE TESTED FOR STABILITY PER ASTM D6928 WITH A LOSS OF 18% OR MORE INDICATING NOT ACCEPTABLE.

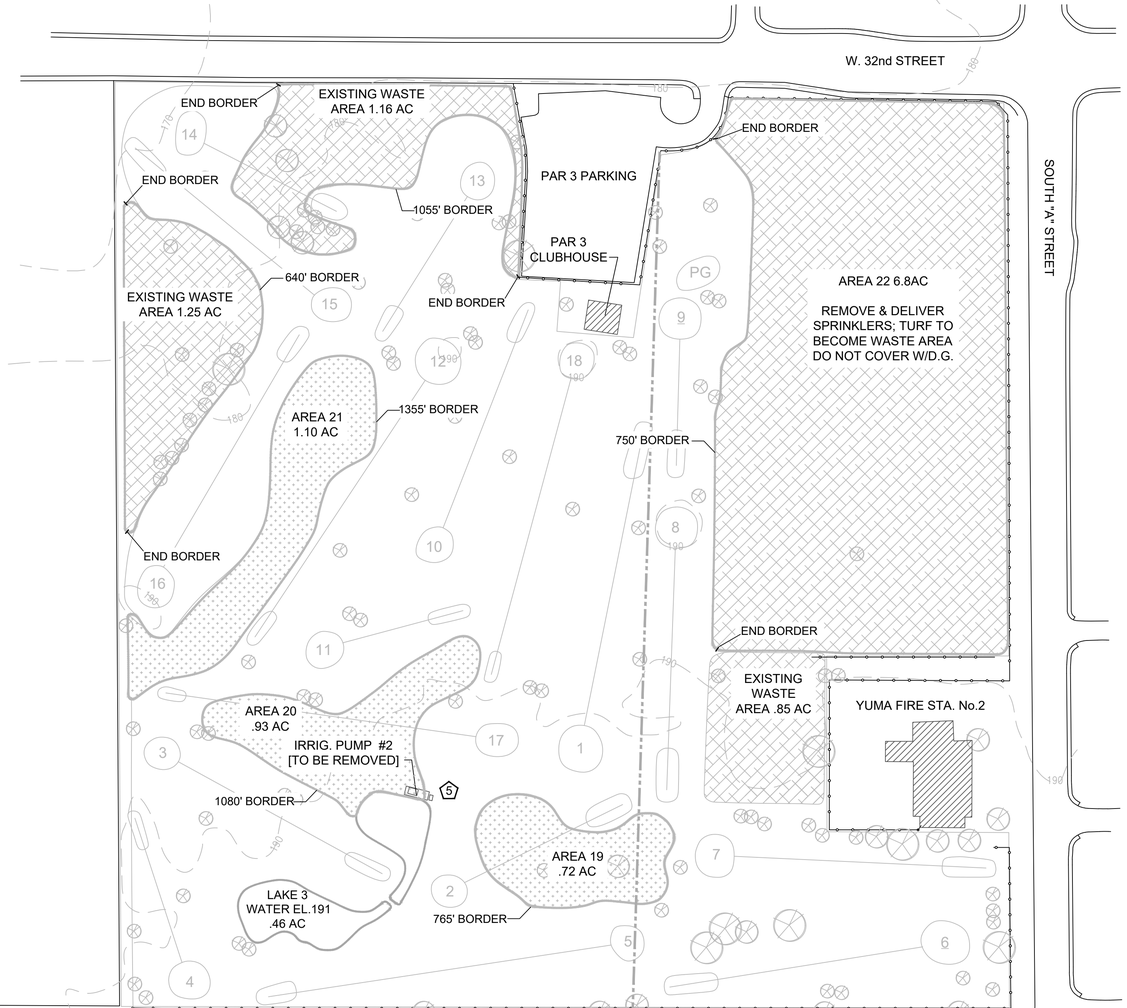

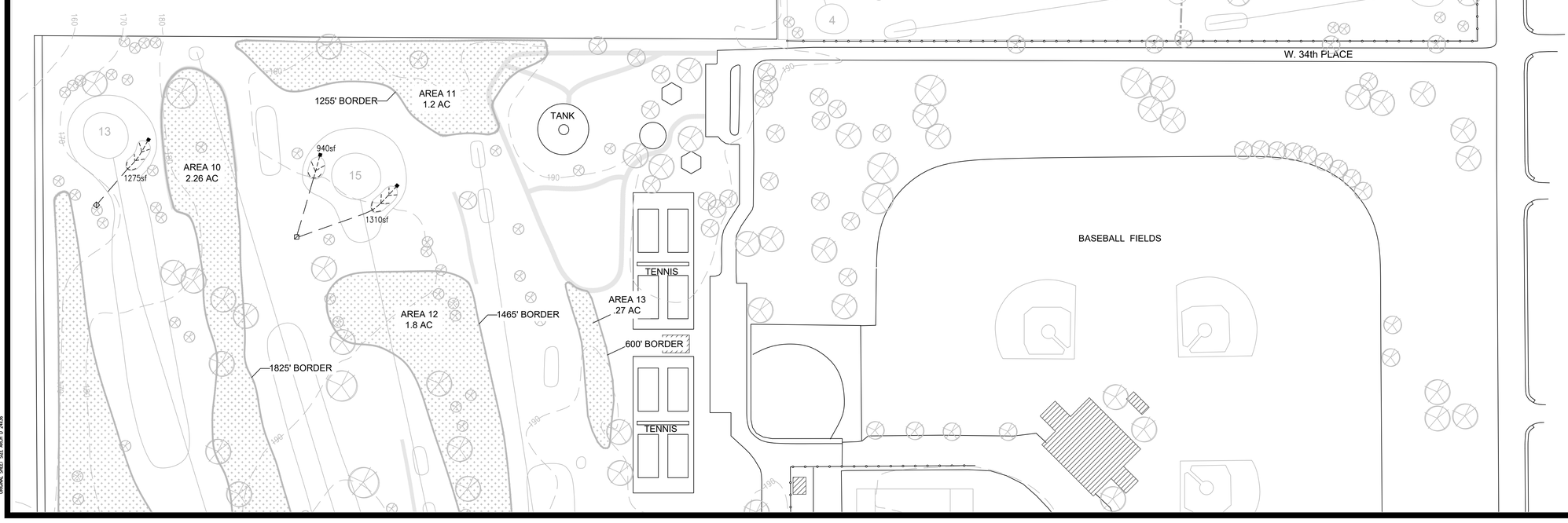

90% PLAN SET
NOT FOR CONSTRUCTION

BUNKER DRAINAGE LEGEND

- 4" SOLID HDPE DRAIN PIPE
- 4" PERFORATED PIPE 'FRENCH DRAIN' W/GRAVEL
- DRAINLINE CLEANOUT W/CAP
- 12" NDS DRAIN BASIN/SUMP

LANDSCAPE LEGEND

- WASTE AREAS NO CONTRACTOR WORK
- IRRIGATED TURF CONVERT TO DESERT LANDSCAPE

BUNKER SQUARE FOOTAGE

Hole	Bkrs.Qty	Square Feet
1	1	1200
2	3	2000
3	1	1610
4	1	910
5	0	0
6	1	965
7	1	2610
8	2	2650
9	2	3355
10	3	3705
11	1	1175
12	0	0
13	1	1275
14	0	0
15	2	2250
16	2	4015
17	1	2345
18	1	1480
DR	1	480
	TOTAL SQ. FT.	32025

SCALE 1" = 100'
0 25 50 100 200 300

CITY OF Yuma
City Hall, 1 City Plaza, Yuma AZ 85364 ph. (928) 373-5000

Gary Kaye Designs & Project Management
3053 W. Owens Dr. Phoenix AZ 85086
(623) 341-2302 garykayedesign@gmail.com

Bunker Drainage & Landscape Plan III
Desert Hills Golf Irrigation Renovations

Owner: City of Yuma, Arizona

RFP#: 23-067
Drawn By: GSK
Approved: GSK
Date: 4/16/2023

REGISTERED LANDSCAPE ARCHITECT
CERTIFICATE NO. 64604
GARY S. KAYE
Date Signed
ARIZONA, U.S.A.

Date	Revisions	By

Sheet
LS-3
18 of 21

ORIGINAL SHEET SIZE ARCH D 24x36

C:\Users\HP\Desktop\LandscapeArchitect\2022_Yuma\Yuma_Basemap2.dwg, 4/23/2023 9:43:13 PM, _AutoCAD PDF (General Documentation).pc3

90% PLAN SET
NOT FOR CONSTRUCTION

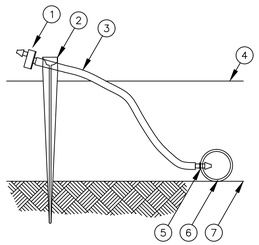

1. RAIN BIRD XERI-BUG EMITTERS XB-10 FOR DESERT PLANTS AND SHRUBS; XB-20 FOR TREES.
2. 1/4" DRIP TUBING STAKE
3. 1/4" HDPE DISTRIBUTION TUBING
4. TOP OF MULCH OR GRAVEL.
5. 1/4" BARBED COUPLER, TEE OR ELL
6. 5/8" POLYETHYLENE TUBING – PURPLE STRIPE
7. EARTH FINISHED GRADE

NOTE: 5/8" POLYETHYLENE LATERALS SHALL SERVICE APPROX. 10 – 30 PLANTS. CHECK EMITTER MANUFACTURER SPECIFICATIONS FOR MAX PIPE FLOWS.

1 / LS4 TYPICAL DRIP LATERAL PIPE & DRIP EMITTERS

DESERT PLANTS, CACTI NEED AT LEAST (1) 1GPH EMITTER (OPUNTIA, YUCCA, BARRELS)
FLOWERING PLANTS, GROUNDCOVERS (1) 2GPH EMITTER (LANTANA, PENSTAMON, VERBENA)
LARGER PLANTS, SHRUBS (2) 2GPH EMITTERS (CAESALPINIA, PURPLE SAGE, BOUGAINVILLA)
TREES, PALMS, NEW AND/OR MATURE MIN (3) 2GPH EMITTERS; LARGE TREES (4) OR (5).

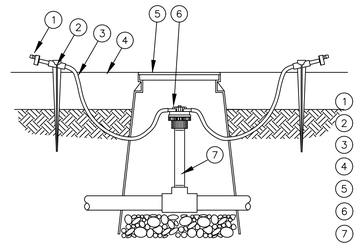

1. RAIN BIRD XERI-BUG EMITTERS XB-10 FOR DESERT PLANTS AND SHRUBS; XB-20 FOR TREES.
2. 1/4" DRIP TUBING STAKE
3. 1/4" HDPE DISTRIBUTION TUBING
4. TOP OF MULCH OR GRAVEL.
5. CARSON TrussT 708 6" V.B. TAN LID
6. RB EMT-6XERI FULL FLOW 6-OUTLET MANIFOLD
7. 1/2" x 6" RISER

2 / LS4 TYPICAL MULTI-OUTLET EMITTER

**IMPORTANT NOTE: FLOOD BUBBLERS ARE SHOWN AS AN ALTERNATIVE TO DRIP IRRIGATION. CREATE TREE WELLS TO CONTAIN WATER.

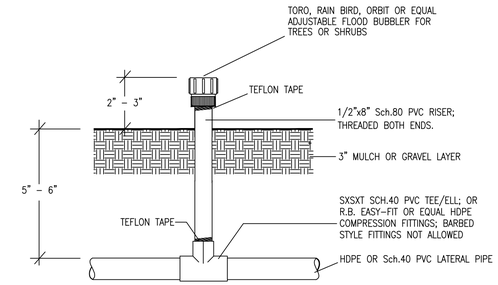

3 / LS4 TYPICAL FLOOD BUBBLER

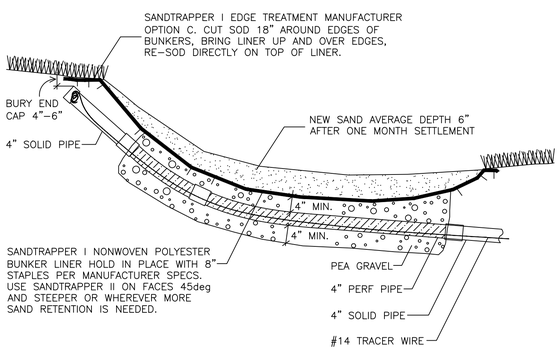

4 / LS4 TYPICAL BUNKER RENOVATION DETAIL – SECTION VIEW

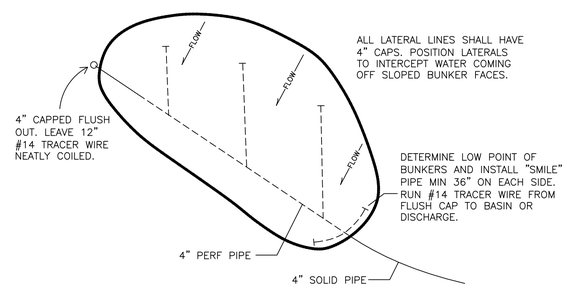

NOTES:
1. AFTER OLD SAND REMOVAL AND SUBGRADE PREP CONTRACTOR SHALL PAINT PROPOSED DRAINLINES.
2. DHGC SUPERINTENDENT WILL VIEW AND APPROVE DRAINAGE PREPARATIONS BEFORE ANY EXCAVATION.
3. INSTALL DRAIN LINES IN NATURAL LOW POINTS; ALL BUNKERS SHALL HAVE SUMP OR "SMILE" PIPE.
4. CLEAN UP AND COMPACT SUBGRADE AFTER DRAINAGE INSTALL PRIOR TO INSTALLING BUNKER LINER.

5 / LS4 TYPICAL BUNKER DRAINAGE DETAIL – PLAN VIEW

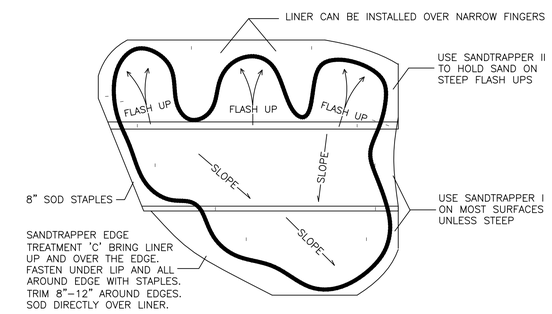

NOTES:
1. CUT 18" SOD AROUND BUNKER EDGE. INSTALL FLUSHOUTS. REPLACE SOD WITHIN 36 HOURS.
2. UNROLL LINER PERPENDICULAR TO SLOPE. START AT BOTTOM OF SLOPE AND WORK UP.
3. SEAMS SHOULD OVERLAP 3"-4" PLACE SOD STAPLES EVERY 6" AND DRIVE THROUGH BOTH LAYERS.
4. USE TYPICAL CONSTRUCTION ADHESIVE (LIQUID NAILS OR SIMILAR) ON SEAMS.
5. USE AMPLE SOD STAPLES TO BATTEN DOWN CLOTH AT BASE, OVER LIP, AND AT SEAMS.
6. CONTRACTOR SHALL USE 90" WIDE ROLLS TO MINIMIZE SEAMS.

6 / LS4 TYPICAL BUNKER LINER INSTALLATION – PLAN VIEW

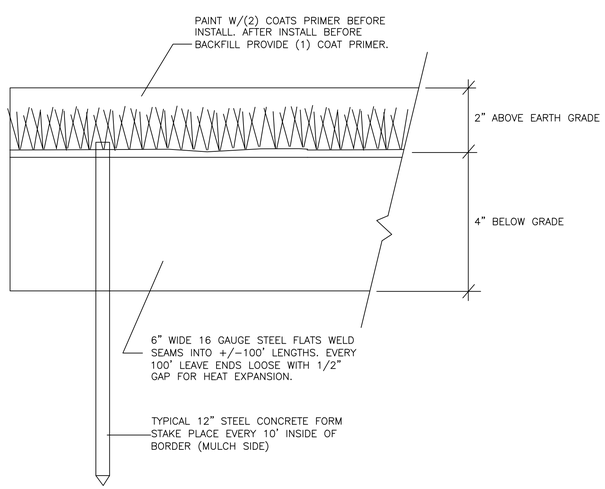

7 / LS4 STEEL LANDSCAPE BORDER DETAIL

*NOTE: PREFERRED METHOD FOR CART PATH CROSSINGS IS DIRECTIONAL BORING. THIS DETAIL PERTAINS TO OPEN TRENCH PIPE INSTALLATIONS.

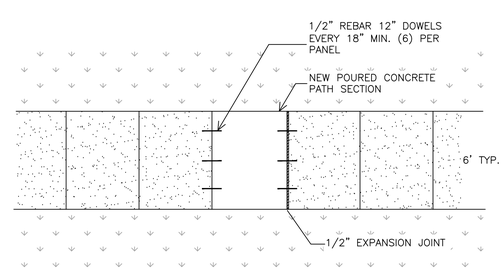

NOTES:
1. CONTRACTOR SHALL SAW CUT, REMOVE CONCRETE AND DISPOSE DEBRIS OFF SITE.
2. ENTIRE PANEL CONTROL JOINT TO JOINT MUST BE REMOVED MIN. 48" WIDE.
3. PIPE CROSSINGS BACKFILL 95% COMPACTION REQUIRED BEFORE CONCRETE REPAIRS.
4. CONCRETE SHALL BE 3500psi MATCHING CITY OF YUMA STANDARD SPECIFICATIONS.

8 / LS4 TYPICAL CONCRETE CART PATH REPAIRS – PLAN VIEW

9 / LS4 RESERVE FOR FUTURE USE

ORIGINAL SHEET SIZE ARCH D 24x36

CITY OF Yuma
City Hall, 1 City Plaza, Yuma AZ 85364 ph. (928) 373-5000

Gary Kaye Design & Project Management
3053 W. Owens Dr. Phoenix AZ 85086
(623) 341-2302 garykayedesign@gmail.com

Bunker & Landscape Installation Details
Desert Hills Golf Irrigation Renovations

Owner: City of Yuma, Arizona

RFP#: 23-067
Drawn By: GSK
Approved: GSK
Date: 4/16/2023

REGISTERED LANDSCAPE ARCHITECT
CERTIFICATE NO. 64604
GARY S. KAYE
Date Signed
ARIZONA, U.S.A.

Date	Revisions	By

Sheet
LS-4
19 of 21

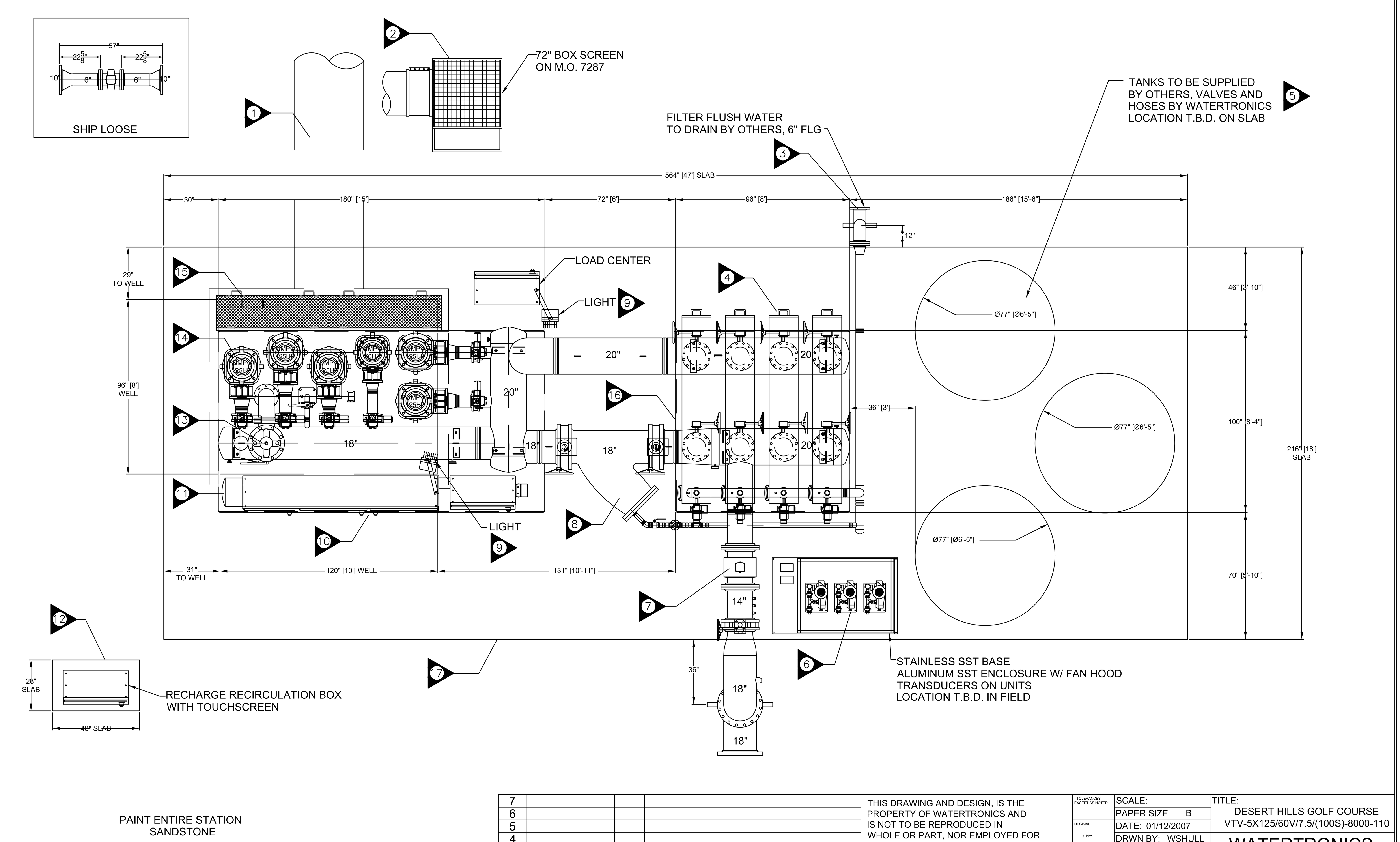

NO.	DATE	BY	DESCRIPTION
7			
6			
5			
4			
3			
2			
1	--/--/----	---	-

THIS DRAWING AND DESIGN, IS THE PROPERTY OF WATERTRONICS AND IS NOT TO BE REPRODUCED IN WHOLE OR PART, NOR EMPLOYED FOR ANY PURPOSE OTHER THAN SPECIFICALLY PERMITTED IN WRITING BY WATERTRONICS. THIS DRAWING LOANED AND SUBJECT TO RETURN ON DEMAND

TOLERANCES EXCEPT AS NOTED	SCALE:	TITLE: DESERT HILLS GOLF COURSE VTV-5X125/60V/7.5/(100S)-8000-110
	PAPER SIZE B	
DECIMAL ± N/A	DATE: 01/12/2007	
	DRWN BY: WSHULL	WATERTRONICS ELECTRONICALLY CONTROLLED PUMPING SYSTEMS HARTLAND, WISCONSIN
FRACTION ± N/A	CHCK'D: ---	
	APP'D: ---	
ANGULAR ± N/A	REF: ---	SHEET 1 OF 26 SHEETS / REV
	JOB NUMBER: 2006347	DRAWING NO. VT10493 / O

1 / PS1 EXISTING PUMP STATION FACTORY (ORIGINAL) DRAWING WITH NOTES

CONTRACTOR BID SHALL INCLUDE THESE WORK ITEMS:

1. CLEAN OUT AND DE-SILT INTAKE FLUME W/VAC TRUCK OR SIMILAR MEANS.
2. INSPECT AND CLEAN END BASKET. CLEAN ALGAE, PLANTS, DEBRIS WITHIN 10 FOOT DIAMETER ALL SIDES. IF CORRODED OR LARGE HOLES REPORT TO DHGC BEFORE REPAIRS.
3. FIND, EXPOSE AND CLEAN UP DISCHARGE END OF TEKLEEN FILTER FLUSH LINE. TEST FILTER FLUSH CAPABILITY AND REPAIR ANY EROSION AT DISCHARGE.
4. RENOVATE (4) TEKLEEN FILTERS MODEL ABW10LP W/FACTORY PARTS. REPLACE (4) ELEC BUTTERFLY VALVES AND SIGHT GLASSES, ALL 1/4" TUBING, PLASTIC FITTINGS, (4) NEW 3" GAUGES. TEST ALL FUNCTIONS THROUGH MAIN PANEL. CALIBRATE TO FACTORY SPECS.
5. CLEAN (3) TANKS REMOVE ALL FERTILIZER RESIDUE AND DISPOSE OFF SITE. REPLACE HOSES FROM TANKS TO FERTIGATION UNIT, PVC BALL VALVES AND ALL PLASTIC FITTINGS.
6. CLEAN UP FERTIGATION PUMPS AND ENCLOSURE. REPLACE TUBING AND RELATED FITTINGS TO PUMP DISCHARGE. REPLACE (3) NEPTUNE 1000ml SIGHT TUBES. REPLACE ALL PVC BALL VALVES. TEST FUNCTIONS THROUGH PANEL TO MANUF. SPECS.
7. INSPECT AND TEST ALL FUNCTIONS OF EXISTING FLOW METERS THROUGH PUMP PANEL.
8. DISASSEMBLE, INSPECT, CLEAN AND REFURBISH 18" WYE STRAINER. REMOVE SURFACE RUST SPOT PAINT FITTINGS AND PIPE. REPLACE 2" ELECTRIC FLUSH VALVE W/2" RAINBIRD E.V. REPLACE PSI GAUGE. TEST ALL FUNCTIONS THROUGH PUMP PANEL.
9. INSPECT, TEST ALL LIGHTING IN AND AROUND THE PUMP STATION AND ATTACHED TO ROOF. REPLACE BULBS AS NECESSARY. TEST ALL SWITCHES FOR PROPER FUNCTION. REPLACE RUSTY J-BOXES, CONDUIT CLAMPS, SWITCH BOXES AND RELATED HARDWARE.
10. PERFORM PUMP PANEL DIAGNOSTICS, TESTING, RE-SET CONTROLS TO ORIGINAL FACTORY SPECS. REPLACE DEFECTIVE PANEL COMPONENTS INCLUDING LAMPS AND SWITCHES.
11. PROVIDE AND INSTALL NEW PUMP PANEL A/C UNIT. REMOVE TAPE, EXTENSION CORD, AND REPLACE LOUVERED VENT OVER HOLE IN PANEL.
12. PERFORM RECIRC PUMP PANEL DIAGNOSTICS, TESTING, RE-SET CONTROLS TO FACTORY SPECS. TEST ALL FUNCTIONS, SWITCHES, SENSORS IN FIELD AND AT PANEL.
13. INSPECT, TEST, RE-SET AND REPLACE ANY DEFECTIVE COMPONENTS OF PUMP STATION P.R.V. VALVE. RETURN P.R.V. SETTINGS TO ORIGINAL WATERTRONICS FACTORY SPECS.
14. PULL PUMPS INSPECT BOWLS, SHAFTS AND RELATED HARDWARE. PERFORM PUMP AND MOTOR DIAGNOSTICS, TESTING, ACCORDING TO MANUF SPECS WITH WRITTEN REPORT TO CITY. PREPARE COST ESTIMATE FOR CITY BEFORE PROCEEDING WITH REPAIRS.
15. CLEAN UP AND REMOVE SURFACE RUST AT WETWELL ENTRANCE HATCHES. RE-PAINT HATCHES, HINGES, FRAMES AND RELATED HARDWARE. MATCH COLOR AND TYPE OF PAINT.
16. CLEAN UP, REMOVE SURFACE RUST, AND RE-PAINT ENTIRE TEKLEEN BASE SKID. REMOVE SURFACE RUST AND SPOT PAINT THE REST OF FILTER MANIFOLDS AND HARDWARE.
17. CLEAN UP, REMOVE SURFACE RUST, AND SPOT-PAINT PUMP STATION SKID, MANIFOLDS, PIPE, CONNECTIONS AND RELATED HARDWARE. NO VISIBLE RUST OR CORROSION IS THE FINAL CONDITION BUT PUMP STATION DOES NOT REQUIRE A COMPLETE RE-PAINT.
18. NOT SHOWN: REPAIR AND REPLACE DAMAGED ROOF PANELS WITH LIKE KIND MATERIALS SAME COLOR. PROVIDE CITY WITH SUBMITTAL OF MATERIALS BEFORE STARTING WORK.
19. NOT SHOWN: UPGRADE EXIST SIGMA PLC COMMUNICATIONS WITH WATERVISION 2.0.
20. NOT SHOWN: REPLACE EXIST RADIO FOR REMOTE CONTROL WELL WITH CELLULAR RTU.
21. NOT SHOWN: REPLACE WEAR ITEMS, LEVEL TRANSDUCER, PSI TRANSDUCER, GAUGES.

2 / PS1 PUMP STATION MAJOR MAINTENANCE & RENOVATION WORK SCOPE

YOUR WATERTRONICS PUMP STATION CREDENTIALS

Congratulations on the purchase of your new Watertronics Pump Station!

DESERT HILLS GOLF COURSE

DESIGN - 8000 GPM @ 110 PSI

WATERTRONICS MODEL # : VTV-125/125/125/125/125/60V/7.5		WATERTRONICS PUMP STATION SERIAL #: 2006-347
ELECTRICAL SCHEMATIC #S: SC06347 1-25	Station System FLA. 970.0	Power: 480 Volt 3 Phase - 60 Hz DISCONNECT: 1200/200 Amp

ALARMS Low Pressure High Pressure Phase/Voltage Low Wet Well Level Starter / O.L. Fault VFD Fault

	Sustain Pump	Pump # 1	Pump # 2	Pump # 3	Pump # 4	Pump # 5	Pump # 6	Fertigation Pumps
HORSEPOWER	7.5	60	125	125	125	125	125	Neptune Pump 567-S-N4-FA Serial Number : 168092 U.S Motor F052 Frame B56C 208-230 / 460 Volt ID #K03-F052-M-1
RPM	3600	1800	1800	1800	1800	1800	1800	
DESIGN - Gallons / Minute	66	700	1460	1460	1460	1460	1460	
Total Dynamic Head	275 ft	280 ft	280 ft	280 ft	280 ft	280 ft	280 ft	
PUMP - Manufacturer	Goulds	Goulds	Goulds	Goulds	Goulds	Goulds	Goulds	
Model #	80GS75	11CLC-5	14RJLC-4	14RJLC-4	14RJLC-4	14RJLC-4	14RJLC-4	Neptune Pump 567-S-N4-FA Serial Number : 167588 U.S Motor F052 Frame B56C 208-230 / 460 Volt ID #K03-F052-M-2
TOTAL PUMP LENGTH	19' 2"	18' 8"	18' 8"	18' 8"	18' 8"	18' 8"	18' 8"	
MOTOR - Manufacturer	Franklin	U.S. Electric	U.S. Electric	U.S. Electric	U.S. Electric	U.S. Electric	U.S. Electric	
Model # Voltage	2343285202 460 / 380 Volt	BF56 Frame 364TP 460 Volt	BF71 Frame 405TP 460 Volt	BF71 Frame 405TP 460 Volt	BF71 Frame 405TP 460 Volt	BF71 Frame 405TP 460 Volt	BF71 Frame 405TP 460 Volt	
Full Load Amps (FLA)	11.5	68.0	142.0	142.0	142.0	142.0	142.0	
Contactor	100-C16	100-C85	100-B180	100-B180	100-B180	100-B180	100-B180	
Overload Relay	193-EEEB	193-EEGE	193-A5M5	193-A5M5	193-A5M5	193-A5M5	193-A5M5	Neptune Pump 567-S-N4-FA Serial Number : 169939 U.S Motor F052 Frame B56C 208-230 / 460 Volt ID #K03-F052-M-3
Fuse	AJT-20	AJT-100	AJT-200	AJT-200	AJT-200	AJT-200	AJT-200	
Actuator	None	Bernard OA8-025	Bernard OA8-025	Bernard OA8-025	Bernard OA8-025	Bernard OA8-025	Bernard OA8-025	
Butterfly Valve Size/ Make	2" Watts	5" Watts	6" Watts	6" Watts	6" Watts	6" Watts	6" Watts	
Check Valve Size/Make	None	6" Valmatic #1406	8" Valmatic #1408	8" Valmatic #1408	8" Valmatic #1408	8" Valmatic #1408	8" Valmatic #1408	

Relief Valve Size/Make: 8 " Flanged Angel Watts M1100 **Pilot :1/2" CP16 -Y Strainer W/Ndl Valve: 3/8" #X42N2**	**Air Conditioner :** Rittal #3329140 2750watt	**Pressure Transducer :** SSI 4-20ma **250psi** **1740** # 040981031	**Flow Meter :** 14**" MAGNETIC, W/BLIND, SIGNAL CONVERTER** **METER P/N 7ME6350-5KJ11-11-1AA0 TRANSMITTER P/N 7ME6910-1AA10-0AA0**
Liquid Level Float Sensor : CONERY-2901-B3S1-20	**Soft Start :** SMC-FLEX , 135Amp #150-F135NBD / **Radio Modems : P/N XT09-9V-1FN**	**Pressure Transducer :** SSI 4-20ma **15psi** **(Level Sensor) 1750** # 041552057	**Flow Meter : 6" MAG 3100W P/N 7ME6350-4HJ11-1AA0** **Transmitter: MAG 5000, BLIND P/N 7ME6910-1AA10-0AA0**
Modicon PLC : Serial Number :31063131496 **Dated :** 1-07 **612-04 Serial Number:**31063332509 **Dated :** 1-07	**Touchscheen : Proface GP2301 Serial Number :066950D000815** **Proface GP2301 Serial Number : 35531250113**	**Mechanical Seals :** 1-1/4" Hydro Head 2 piece anodized	**Wye Strainer :** 18" Keckley 1/8" Screen

Motor Serial's	Pump Serial's	DISCHARGE FILTER	VARIABLE FREQUENCY DRIVES
Sustain-06H18-23-1735 **Motor** # 1- K12-BF56A-M-S50-0024 **Motor** # 4-k09-82001368-006-R5 **Motor** # 2 – K10-BF71A-M-S43-002 **Motor** # 5-K09-BF71A-M-S39-003 **Motor** # 3 –K09-BF71A-M-S39-008 **Motor** # 6 –K09-82001367-006-R05	Sustain-M0604260 **Pump** # 1- ME523966-1 **Pump** # 4 – ME523966-4 **Pump** # 2 ME523966-2 **Pump** #5-ME523966-5 **Pump** # 3-ME523966-3 **Pump** # 6 –ME523966-6	QTY 3 Tekleen 10" ABW10-LP SS 300 Micron Screen (Short Piston)	125HP Altivar ATV61HD90N4 Serial Number : EL0645023756 60HP Altivar ATV61HD45N4 Serial Number : 6W0649000320 1hp Altivar AATV31HO75N4 Qty 3 Serial Number : 080628047265 Serial Number : 080628047251 Serial Number : 080638007154
Wet Well Depth : 19 Feet	**Wet Well Diameter :** 8 x 10		

THIS IS AN IMPORTANT DOCUMENT. PLEASE RETAIN IT FOR FUTURE REFERENCE.

3 / PS1 EXISTING PUMP STATION FACTORY SPECIFICATIONS
FOR REFERENCE ONLY

PLAN VIEW:

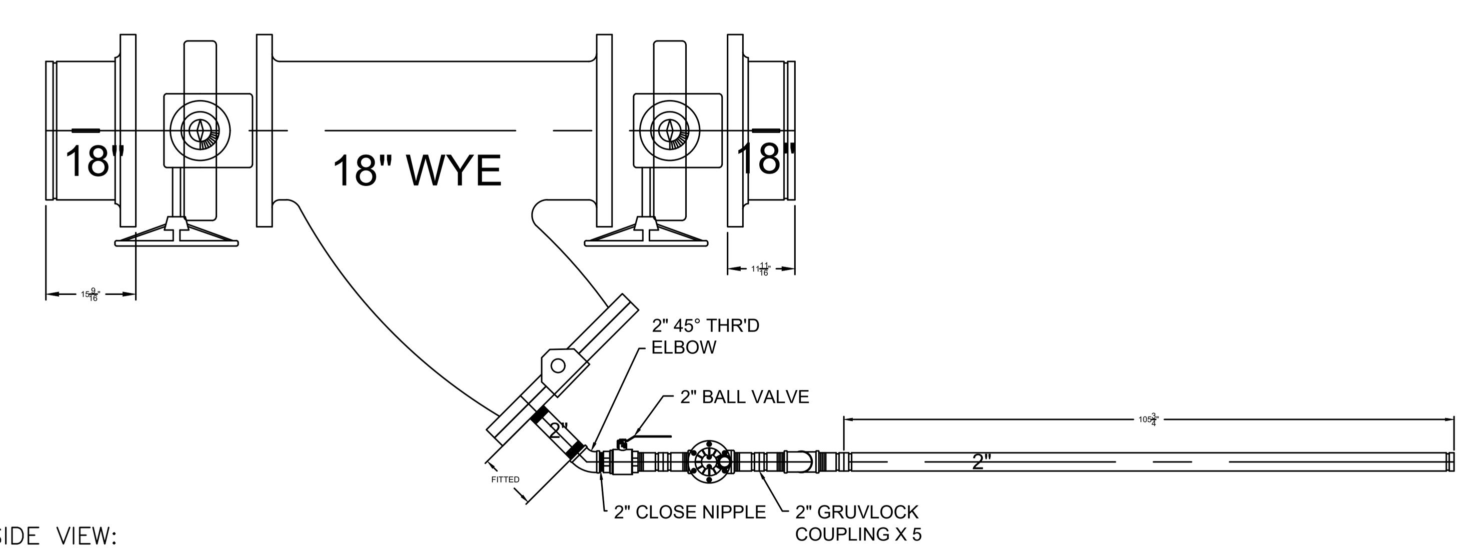

SIDE VIEW:

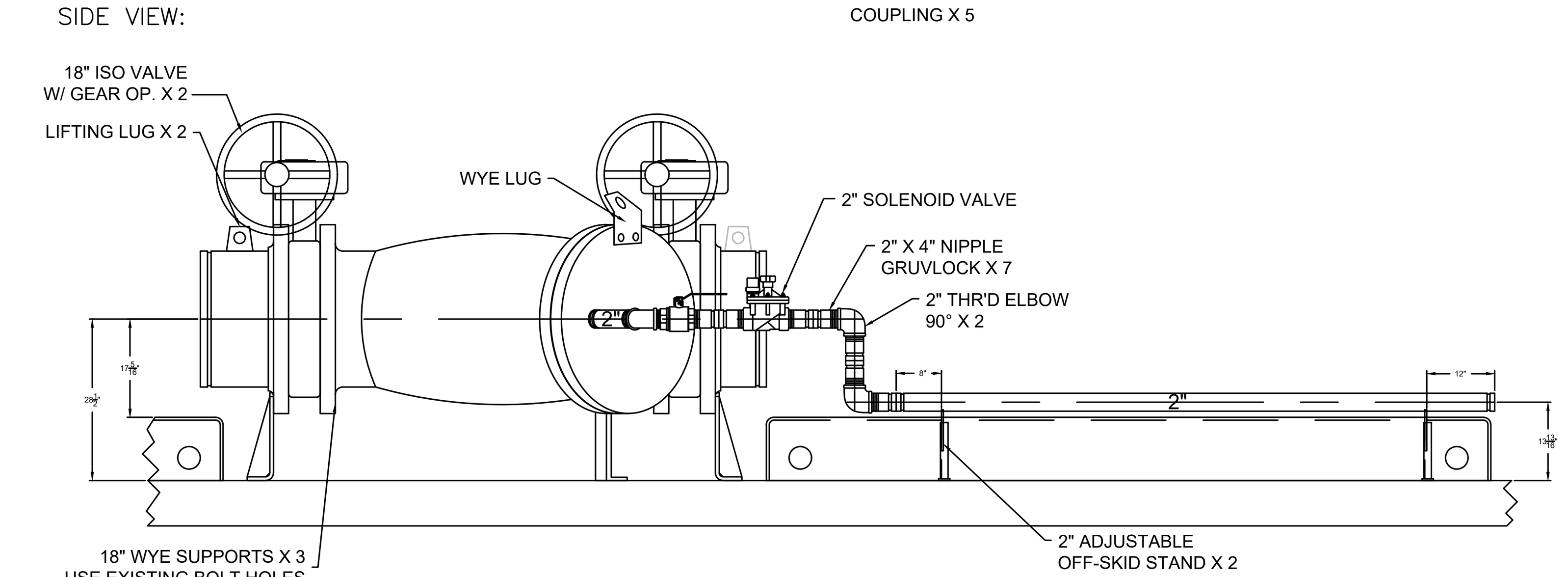

4 / PS1 AUTOFLUSH 18" WYE FILTER FACTORY (ORIGINAL) DETAILS
FOR REFERENCE ONLY

CITY OF Yuma
City Hall, 1 City Plaza, Yuma AZ 85364 ph. (928) 373-5000

Gary Kaye Design & Project Management
3053 W. Owens Dr. Phoenix AZ 85086
(623) 341-2302 garykayedesign@gmail.com

Pump Specifications & Work Scope I
Desert Hills Golf Irrigation Renovations

Owner: City of Yuma, Arizona

RFP#: 23-067
Drawn By: GSK
Approved: GSK
Date: 4/16/2023

REGISTERED LANDSCAPE ARCHITECT CERTIFICATE NO. 64604 GARY S. KAYE Date Signed ARIZONA, U.S.A.

Date	Revision	By

Sheet
PS-1

ORIGINAL SHEET SIZE: ARCH D 24x36
C:\Users\HP\Desktop\LandscapeArchitect\2022_Yuma\Yuma_Basemap2.dwg, 4/23/2023 9:43:23 PM, _AutoCAD PDF (General Documentation).pc3

1 / PS2 EXISTING PUMP STATION & WET WELL – SIDE VIEW
FOR REFERENCE ONLY

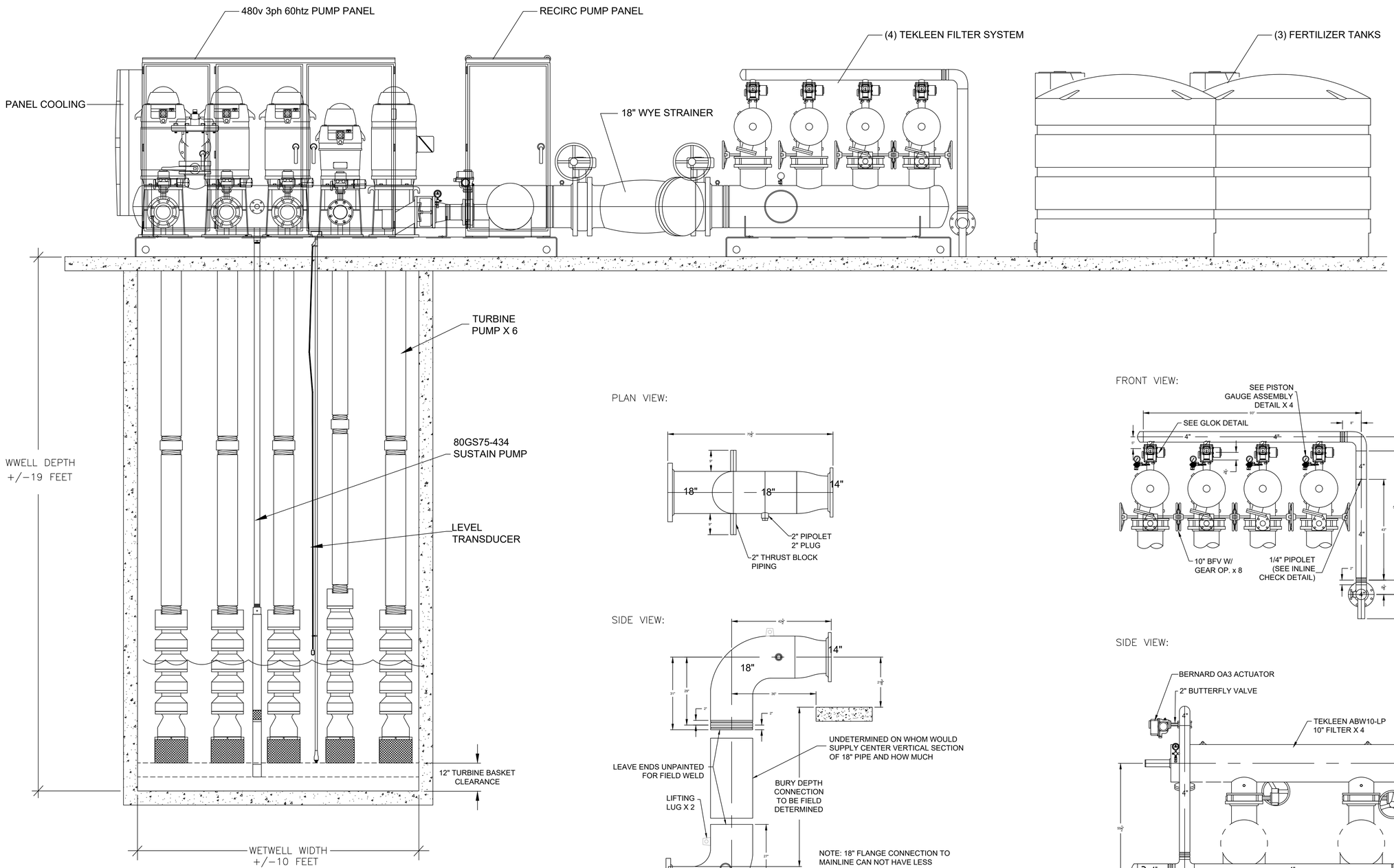

PLAN VIEW:

SIDE VIEW:

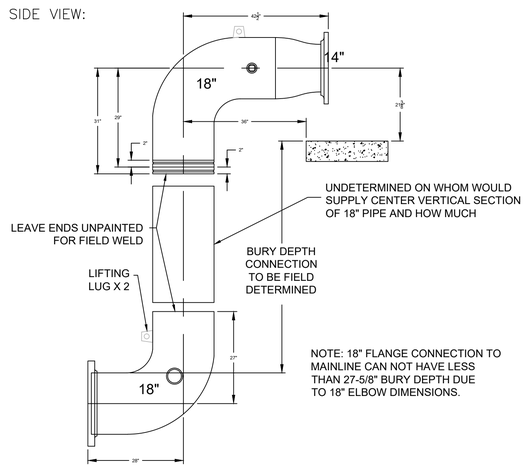

2 / PS2 EXISTING DISCHARGE DROP PIPE FACTORY (ORIGINAL) DETAILS
FOR REFERENCE ONLY

FRONT VIEW:

SIDE VIEW:

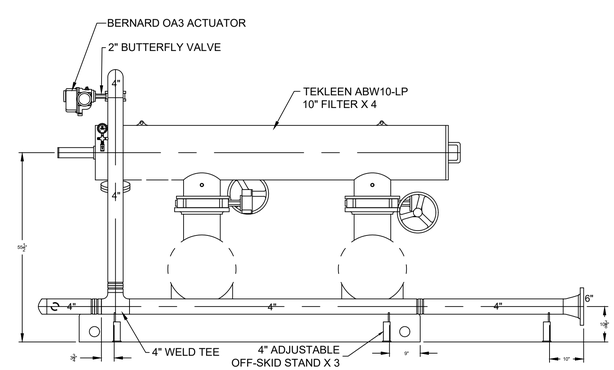

3 / PS2 EXISTING TEKLEEN FILTER SYSTEM FACTORY (ORIGINAL) DETAILS
FOR REFERENCE ONLY

ORIGINAL SHEET SIZE ARCH D 24x36

CITY OF Yuma
City Hall, 1 City Plaza, Yuma AZ 85364 ph. (928) 373-5000

Gary Kaye Design & Project Management
3053 W. Owens Dr. Phoenix AZ 85086
(623) 341-2302 garykayedesign@gmail.com

Pump Specifications & Work Scope II
Desert Hills Golf Irrigation Renovations

Owner: City of Yuma, Arizona

RFP#: 23-067
Drawn By: GSK
Approved: GSK
Date: 4/16/2023

REGISTERED LANDSCAPE ARCHITECT CERTIFICATE NO. 64604 GARY S. KAYE Date Signed ARIZONA, U.S.A.

Date	Revisions	By

Sheet
PS-2
21 of 21

C:\Users\HP\Desktop\LandscapeArchitect\2022_Yuma\Yuma_Basemap2.dwg, 4/23/2023 9:43:28 PM, _AutoCAD PDF (General Documentation).pc3

Water Conservation Grant Fund Application Evaluation
Round 1

City of Yuma – Irrigation Standards Modernization Program	**WC1-061-2023**
Grant Amount	$3,000,000.00
Category	Reclamation
Summary	Yuma Parks and Recreation department maintains approximately 600 acres of public parks and grounds. The WCGF grant would fund a renovation of about 190 acres, consisting of new technologically advanced irrigation systems, turfgrass reduction, smart water meters, pump major maintenance, landscape drainage and weather stations. City personnel will be trained in new maintenance techniques with specific duties directly related to water conservation. This grant would also fund a new cloud-based irrigation monitoring and control system to enable the City to track the effectiveness of these improvements.
Location	City of Yuma, Yuma County
Estimated water savings in acre-feet per year	480
Duration of project/program	1.5 years for implementation - Estimated completion in November 2024. Applicant expects conservation benefits to continue well into the future.

Conservation Activity Benefits and Results
Statutory Evaluation Criteria #1, #2, and #4

Activity Type	Programs and projects that reduce water use Per A.R.S. 49-1332(B)(2)
Source of water	The majority is Colorado River water; a very small amount is groundwater from three City owned wells.
Community information	An estimate of approximately 210,000 full-time residents live inside and outside the City's boundaries. According to the United States Census Bureau, Yuma County has an area of 5,519 square miles (14,290 km2), of which 5,514 square miles (14,280 km2) is land and 5.1 square miles (13 km2) (0.1%) is water. The lowest point in the state of Arizona is on the Colorado River in San Luis in Yuma County, where it flows out of Arizona and into Sonora in Mexico. During the winter agricultural season from November to March, some 40,000 migrant workers cross the border daily to work in United States fields. The area is watered by the Colorado River, and the sector supplies a large part of the US leafy vegetables.
Costs and benefits of project/program	The irrigation systems proposed under this program have an overall service life of 50 years, with the HDPE pipe infrastructure 100 years. The

	applicant's proposed system also uses 70% less copper wire due to new technology. By comparison, the City's current specifications use PVC pipe, ductile iron fittings and other materials with a service life of 30 years. The primary materials used in irrigation systems are petroleum-based plastics and copper wire. Therefore, with a lifespan 66% longer there will be less non-recyclable materials needed for future replacements. Another important part of this program is returning irrigated turf areas, consisting of non-native grasses, back to pure natural desert or slightly enhanced desert landscape with drip irrigation.

Funding Sources
Statutory Evaluation Criteria #3 and #5

Eligibility for LTWAF or WSDF	Applicant understands the project is eligible for funding from WIFA's LTWAF but believes it is impractical to fund this project via these funds. It is impractical to leverage additional appropriated funds at this time as funding this project via a loan will adversely affect the City of Yuma bond rating and financial well-being. WIFA staff find it unclear whether this type of conservation program would be feasible with a repayment obligation under the WSDF.
Leverage of multiple funds	The City of Yuma Irrigation Standards Modernization program is seeking funding incorporating public, private, state, and federal mechanisms to maximize support. The city has identified potential funding from the Bureau Of Reclamation; WaterSmart Energy Efficiency Grant, WaterSmart Drought Grant as well as the Water Conservation Field Service Program funding opportunity.
Source of funding and match	Cash Match funds of $1,700,000 are available in the City of Yuma Grant contingency funds.

Capacity, Feasibility, & Public Comment
Statutory Evaluation Criteria #6, #7, and #8

Qualifications and capacity of applicant	The hardware, software and projects proposed under this water conservation program can be managed through existing City departments as typical capital improvements. Turf removals, new irrigation systems, weather stations, pump maintenance, meters, are all items that can be processed through the City Purchasing department. Landscape architects, consultants to train City personnel, can also be hired through the typical RFP process.

	Parks and Recreation department personnel will handle maintenance and monitoring. The lead City agencies would be Parks and Recreation, Purchasing, and possibly Public Works.
Feasibility of project/program	Most of the improvements proposed under this new program are 90% completed in the design process by an Arizona landscape architecture firm. Since the project has already been in the capital improvements process for quite a while, feasibility, and likelihood of going to construction is very high.
Public comments	The City has embarked upon a water conservation education program developed for its citizenry and surrounding County residents. The program highlights strategies that residents can employ to reduce the overall water consumption in the city's area. This includes among other things, converting turf to desert landscaping. The Parks Department is currently converting select turf areas to serve as demonstration sites. This project will be an extension of that effort. In addition, the project specifications relating to the irrigation system will be used as a template to conserve water at homes and businesses.

Technical Review:

The Applicants **has a current SAM.GOV UEI #** which allows them to apply for federal funds.

The applicant has completed all steps in the grant application process and is requesting funding for a project / program that is acceptable under the regulations. The Irrigation Standards Modernization Program will help to improve water system management, account for, and thereby reduce water losses and is very good technology for water conservation and finding leaks immediately.

Expenditure Code 5.8 Clean Water: Water Conservation

ARPA Final Rule (31 CFR Part 35 RIN 1505–AC77) defines water infrastructure projects as "eligible projects under the Clean Water State Revolving Fund." "A project shall meet the criteria of CWSRF eligibility found in Section 603(c) of the Clean Water Act (CWA)". Specific Expenditure Codes were created to define activities available under the water infrastructure category.

The Interagency Service Agreement (ISA-ARPA-WIFA-070122-01) between the State of Arizona, Office of the Governor and WIFA required the project / program be specific to Expenditure Code 5.8 Clean Water: Water Conservation.

WIFA staff find this project / program is consistent with Expenditure Code 5.8 Clean Water: Water Conservation as determined in Section 603c of the Clean Water Act (CWA) and the ISA.

Water Conservation Grant Fund Application Evaluation
Round 1

Attachments:

- City of Yuma – Application – WC1-061-2023
- Budget
- Photos
- Irrigation Specs and Design

Evaluation Criteria Statutory Reference:

49-1334. **<u>Evaluation criteria for water conservation programs and projects from the water conservation grant fund; procedures</u>**

The authority shall determine the order and priority of water conservation programs and projects proposed to be funded in whole or in part with monies from the water conservation grant fund based on the following, as applicable:

1. The extent to which the water conservation program or project achieves one or more of the results prescribed by section 49-1332, subsection A.
2. The costs and benefits of the water conservation program or project, including environmental costs and benefits.
3. If the water conservation program or project is eligible for funding from the long-term water augmentation fund established by section 49-1302 or the water supply development revolving fund established by section 49-1271 and if the nature of the water conservation program or project makes funding from the long-term water augmentation fund or the water supply development revolving fund impractical.
4. The ability to provide multiple benefits.
5. The degree to which the water conservation program or project will maximize or leverage multiple available funding sources, including federal funding.
6. The qualifications and capacity of an applicant.
7. The feasibility of the water conservation program or project.
8. Public comments.

WCGF Committee Evaluation:

☐ Recommend Rejection of Grant Application

☐ Recommend Approval of Grant Application

☐ Recommend Approval of Grant Application with Modifications

Tab 15

AGENDA ITEM:
Elect a Chairperson – *Chuck Podolak will lead the discussion*

ACTION REQUIRED:
Review, Discuss & Possible Action

PREVIOUS ACTION:
None

STAFF CONTACT:
Chuck Podolak

RECOMMENDED DISCUSSION TIME:
5 Minutes

ATTACHMENTS:
- FY2024 Ballot of Committee Members
- WIFA Policy I.6 - WIFA Board of Directors and Committees

STAFF COMMENTS:
None

Water Conservation Grant Fund Committee Ballot
Elect a Chairperson
FY 2024

<u>Voting WCGF Committee Members</u>

Erin Young
Blake Anderson
Sam Draper
~~Paul E. Brierley~~
Kim Schonek
Andrea Gerlak
Tim Grandy

_____ , Chairperson

Tab 16

AGENDA ITEM:
Call to the Public

ACTION REQUIRED:
None

PREVIOUS ACTION:
None

STAFF CONTACT:
Chelsea McGuire

RECOMMENDED DISCUSSION TIME:
5 Minutes

ATTACHMENTS:
None

STAFF COMMENTS:
None

Tab 17

AGENDA ITEM:

New Business/Issues:

- Next Water Conservation Grant Fund Committee Meeting Date: July 19, 2023 – *Kim Schonek will lead the discussion*

ACTION REQUIRED:

Information & Discussion

PREVIOUS ACTION:

None

STAFF CONTACT:

Yolanda Mendoza

ATTACHMENTS:

None

Tab 18

AGENDA ITEM:
Adjournment

ACTION REQUIRED:
Adjournment of Meeting

PREVIOUS ACTION:
None

STAFF CONTACT:
None

ATTACHMENTS:
None

STAFF COMMENTS:
None